Compal Confidential

NAV51 Schematics Document

Intel Pineview Processor with Tigerpoint + DDRII

2010-03-31

REV: 1.0

Security Classification	Compal Secret Data		
Issued Date	2006/08/18	Deciphered Date	2007/8/18

THIS SHEET OF ENGINEERING DRAWING IS THE PROPRIETARY PROPERTY OF COMPAL ELECTRONICS, INC. AND CONTAINS CONFIDENTIAL AND TRADE SECRET INFORMATION. THIS SHEET MAY NOT BE TRANSFERED FROM THE CUSTODY OF THE COMPETENT DIVISION OF R&D DEPARTMENT EXCEPT AS AUTHORIZED BY COMPAL ELECTRONICS, INC. NEITHER THIS SHEET NOR THE INFORMATION IT CONTAINS MAY BE USED BY OR DISCLOSED TO ANY THIRD PARTY WITHOUT PRIOR WRITTEN CONSENT OF COMPAL ELECTRONICS, INC.

Compal Electronics, Inc.

Title	Cover Page	
Size B	Document Number NAV51 LA-6311P	Rev 1.0
Date: Tuesday, April 13, 2010	Sheet 1 of 33	

Compal Confidential

Model Name : NAV51
File Name : LA-6311P

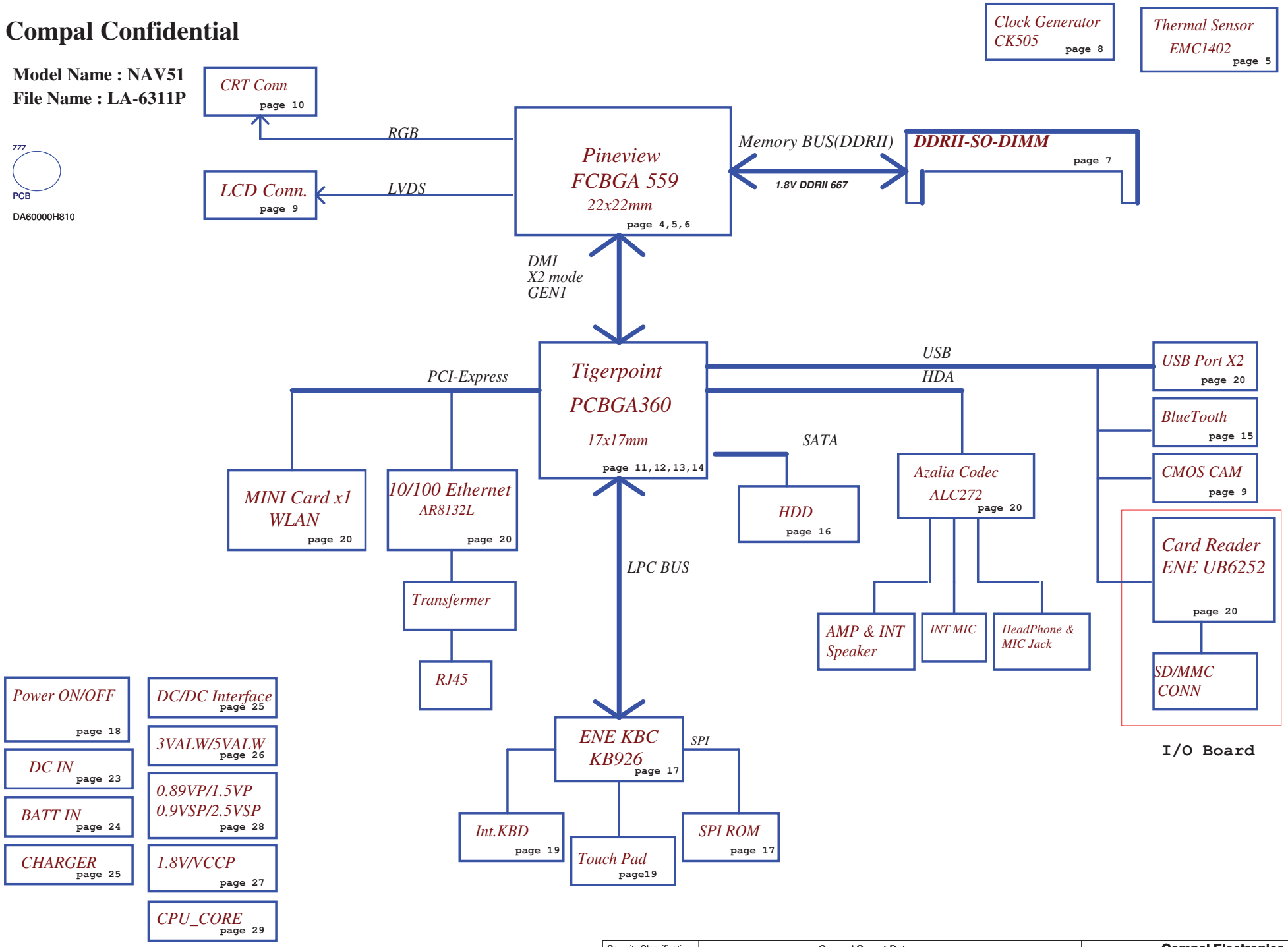

Security Classification	Compal Secret Data		
Issued Date	2006/08/18	Deciphered Date	2007/8/18

THIS SHEET OF ENGINEERING DRAWING IS THE PROPRIETARY PROPERTY OF COMPAL ELECTRONICS, INC. AND CONTAINS CONFIDENTIAL AND TRADE SECRET INFORMATION. THIS SHEET MAY NOT BE TRANSFERED FROM THE CUSTODY OF THE COMPETENT DIVISION OF R&D DEPARTMENT EXCEPT AS AUTHORIZED BY COMPAL ELECTRONICS, INC. NEITHER THIS SHEET NOR THE INFORMATION IT CONTAINS MAY BE USED BY OR DISCLOSED TO ANY THIRD PARTY WITHOUT PRIOR WRITTEN CONSENT OF COMPAL ELECTRONICS, INC.

Compal Electronics, Inc.

Title: Block Diagrams

Size: B | Document Number: NAV51 LA-6311P | Rev: 1.0

Date: Tuesday, April 13, 2010 | Sheet 2 of 33

Voltage Rails

Power Plane	Description	S1	S3	S5
VIN	Adapter power supply (19V)	ON	ON	ON
B+	AC or battery power rail for power circuit.	ON	ON	ON
+CPU_CORE	Core voltage for CPU	ON	OFF	OFF
+0.9VS	0.9V switched power rail for DDR terminator	ON	OFF	OFF
+VCCP	VCCP switched power rail	ON	OFF	OFF
+1.5VS	1.5V switched power rail	ON	OFF	OFF
+1.8V	1.8V power rail for DDR	ON	ON	OFF
+0.89V	Graphic core power rail	ON	OFF	OFF
+3VALW	3.3V always on power rail	ON	ON	ON*
+3VS	3.3V switched power rail	ON	OFF	OFF
+5VALW	5V always on power rail	ON	ON	ON*
+5VS	5V switched power rail	ON	OFF	OFF
+VSB	VSB always on power rail	ON	ON	ON*
+RTCVCC	RTC power	ON	ON	ON

Note : ON* means that this power plane is ON only with AC power available, otherwise it is OFF.

STATE \ SIGNAL	SLP_S3#	SLP_S4#	SLP_S5#	+VALW	+V	+VS	Clock
Full ON	HIGH	HIGH	HIGH	ON	ON	ON	ON
S1(Power On Suspend)	HIGH	HIGH	HIGH	ON	ON	ON	LOW
S3 (Suspend to RAM)	LOW	HIGH	HIGH	ON	ON	OFF	OFF
S4 (Suspend to Disk)	LOW	LOW	HIGH	ON	OFF	OFF	OFF
S5 (Soft OFF)	LOW	LOW	LOW	ON	OFF	OFF	OFF

BOARD ID Table(Page 17)

Vcc	3.3V +/- 5%
Ra/Rc/Re	100K +/- 5%

Board ID	Rb / Rd / Rf	V_{AD_BID} min	V_{AD_BID} typ	V_{AD_BID} max
0(EVT)	0	0 V	0 V	0 V
1(DVT)	8.2K +/- 5%	0.216 V	0.250 V	0.289 V
2(PVT)	18K +/- 5%	0.436 V	0.503 V	0.538 V
3(MP)	33K +/- 5%	0.712 V	0.819 V	0.875 V
4	56K +/- 5%	1.036 V	1.185 V	1.264 V
5	100K +/- 5%	1.453 V	1.650 V	1.759 V
6	200K +/- 5%	1.935 V	2.200 V	2.341 V
7	NC	2.500 V	3.300 V	3.300 V

BOARD ID Table

Board ID	PCB Revision
0	0.1
1	0.2
2	
3	
4	
5	
6	
7	

External PCI Devices

DEVICE	IDSEL #	REQ/GNT #	PIRQ

No PCI Device

EC SM Bus1 address

Device	Address
Smart Battery	0001 011X b

EC SM Bus2 address

Device	Address
EMC1402	100_1100

Tiger Point SM Bus address

Device	Address
Clock Generator (SLG8SP556VTR)	1101 001Xb
DDR DIMMA	1010 000Xb

USB table

EHCI1	UHCI1	Port0	MB USB Conn1.
		Port1	MB USB Conn2.
	UHCI2	Port2	
		Port3	CMOS
	UHCI3	Port4	Card Reader
		Port5	
EHCI2	UHCI4	Port6	BT
		Port7	WLAN
	UHCI5	Port8	
		Port9	
	UHCI6	Port10	
		Port11	

PCIE table

PCIE port1	LAN
PCIE port2	Wireless Card
PCIE port3	
PCIE port4	
PCIE port5	
PCIE port6	

SATA table

SATA port0	HDD
SATA port1	
SATA port2	
SATA port3	
SATA port4	
SATA port5	

THIS SHEET OF ENGINEERING DRAWING IS THE PROPRIETARY PROPERTY OF COMPAL ELECTRONICS, INC. AND CONTAINS CONFIDENTIAL AND TRADE SECRET INFORMATION. THIS SHEET MAY NOT BE TRANSFERED FROM THE CUSTODY OF THE COMPETENT DIVISION OF R&D DEPARTMENT EXCEPT AS AUTHORIZED BY COMPAL ELECTRONICS, INC. NEITHER THIS SHEET NOR THE INFORMATION IT CONTAINS MAY BE USED BY OR DISCLOSED TO ANY THIRD PARTY WITHOUT PRIOR WRITTEN CONSENT OF COMPAL ELECTRONICS, INC.

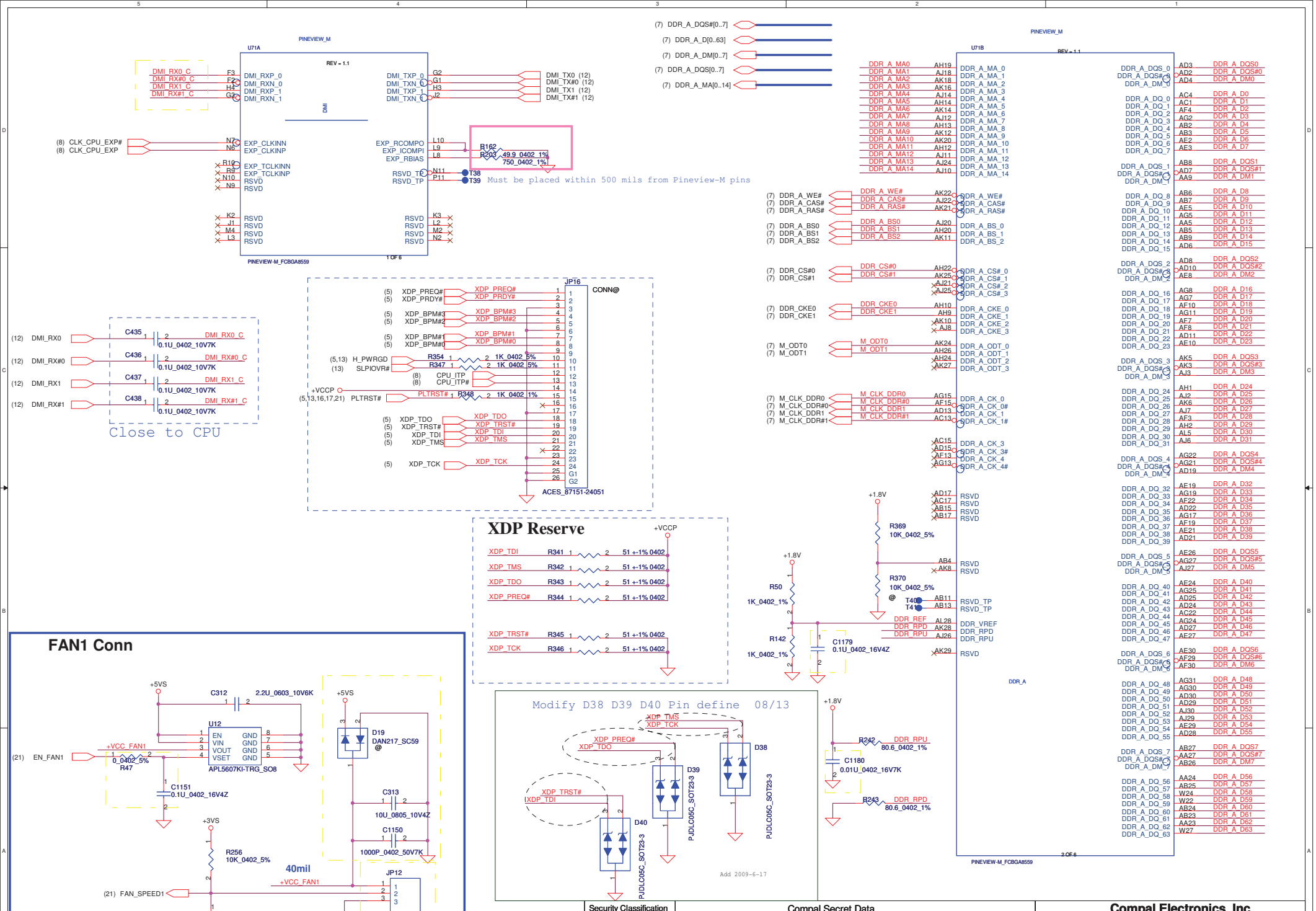

Security Classification	Compal Secret Data		
Issued Date	2006/08/18	Deciphered Date	2007/8/18

THIS SHEET OF ENGINEERING DRAWING IS THE PROPRIETARY PROPERTY OF COMPAL ELECTRONICS, INC. AND CONTAINS CONFIDENTIAL AND TRADE SECRET INFORMATION. THIS SHEET MAY NOT BE TRANSFERED FROM THE CUSTODY OF THE COMPETENT DIVISION OF R&D DEPARTMENT EXCEPT AS AUTHORIZED BY COMPAL ELECTRONICS, INC. NEITHER THIS SHEET NOR THE INFORMATION IT CONTAINS MAY BE USED BY OR DISCLOSED TO ANY THIRD PARTY WITHOUT PRIOR WRITTEN CONSENT OF COMPAL ELECTRONICS, INC.

Compal Electronics, Inc.

Title: Pineview(1/3)

Size: Custom | Document Number: NAV51 LA-6311P | Rev: 1.0

Date: Tuesday, April 13, 2010 | Sheet 4 of 33

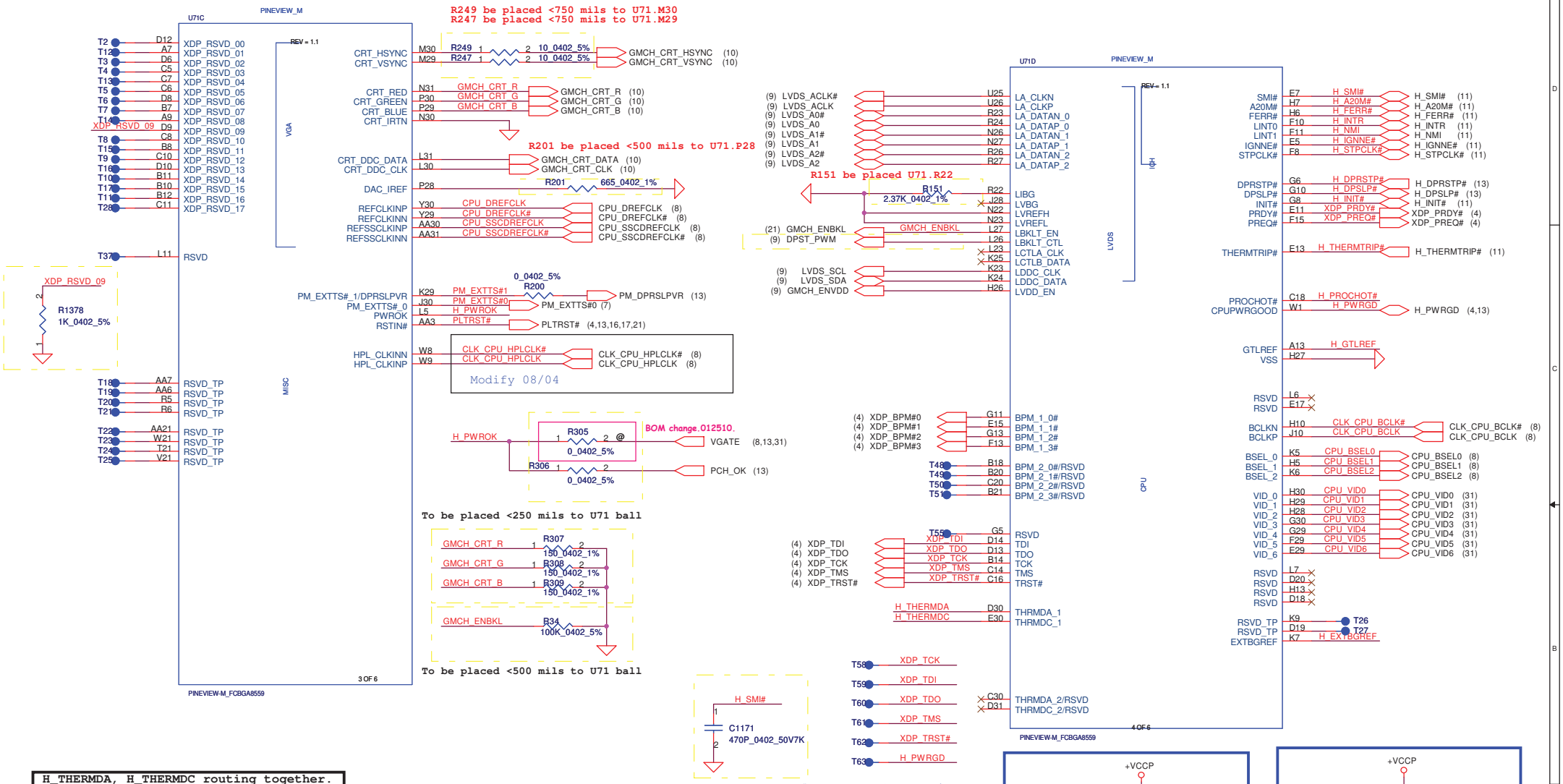

Security Classification	Compal Secret Data		
Issued Date	2006/08/18	Deciphered Date	2007/8/18

THIS SHEET OF ENGINEERING DRAWING IS THE PROPRIETARY PROPERTY OF COMPAL ELECTRONICS, INC. AND CONTAINS CONFIDENTIAL AND TRADE SECRET INFORMATION. THIS SHEET MAY NOT BE TRANSFERED FROM THE CUSTODY OF THE COMPETENT DIVISION OF R&D DEPARTMENT EXCEPT AS AUTHORIZED BY COMPAL ELECTRONICS, INC. NEITHER THIS SHEET NOR THE INFORMATION IT CONTAINS MAY BE USED BY OR DISCLOSED TO ANY THIRD PARTY WITHOUT PRIOR WRITTEN CONSENT OF COMPAL ELECTRONICS, INC.

Compal Electronics, Inc.

Title	Pineview(2/3)	
Size B	Document Number NAV51 LA-6311P	Rev 1.0
Date: Tuesday, April 13, 2010	Sheet 5 of 33	

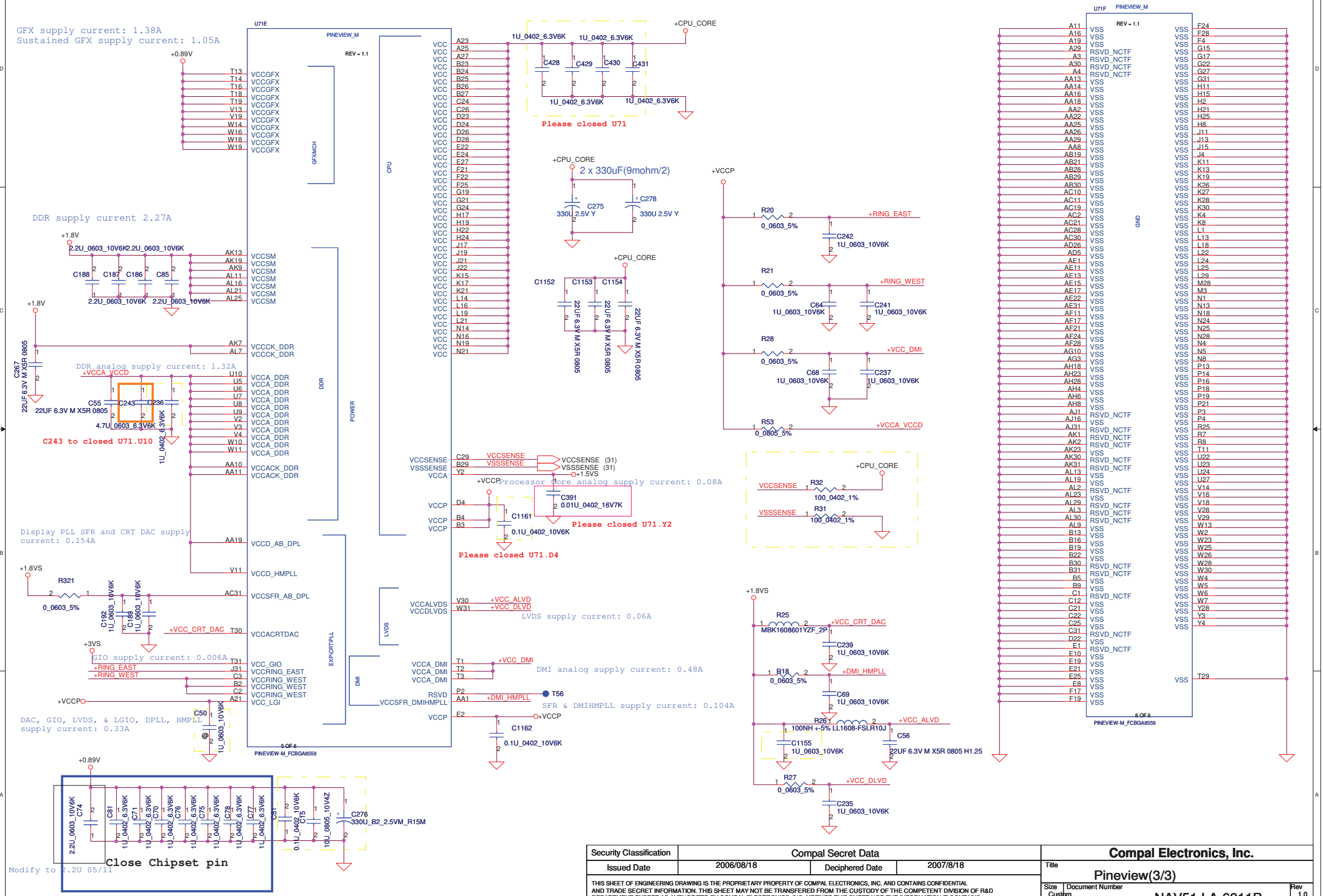

Security Classification	Compal Secret Data		
Issued Date	2006/08/18	Deciphered Date	2007/8/18

THIS SHEET OF ENGINEERING DRAWING IS THE PROPRIETARY PROPERTY OF COMPAL ELECTRONICS, INC. AND CONTAINS CONFIDENTIAL AND TRADE SECRET INFORMATION. THIS SHEET MAY NOT BE TRANSFERED FROM THE CUSTODY OF THE COMPETENT DIVISION OF R&D DEPARTMENT EXCEPT AS AUTHORIZED BY COMPAL ELECTRONICS, INC. NEITHER THIS SHEET NOR THE INFORMATION IT CONTAINS MAY BE USED BY OR DISCLOSED TO ANY THIRD PARTY WITHOUT PRIOR WRITTEN CONSENT OF COMPAL ELECTRONICS, INC.

Compal Electronics, Inc.

Title: Pineview(3/3)

Size: Custom | Document Number: NAV51 LA-6311P | Rev: 1.0

Date: Tuesday, April 13, 2010 | Sheet 6 of 33

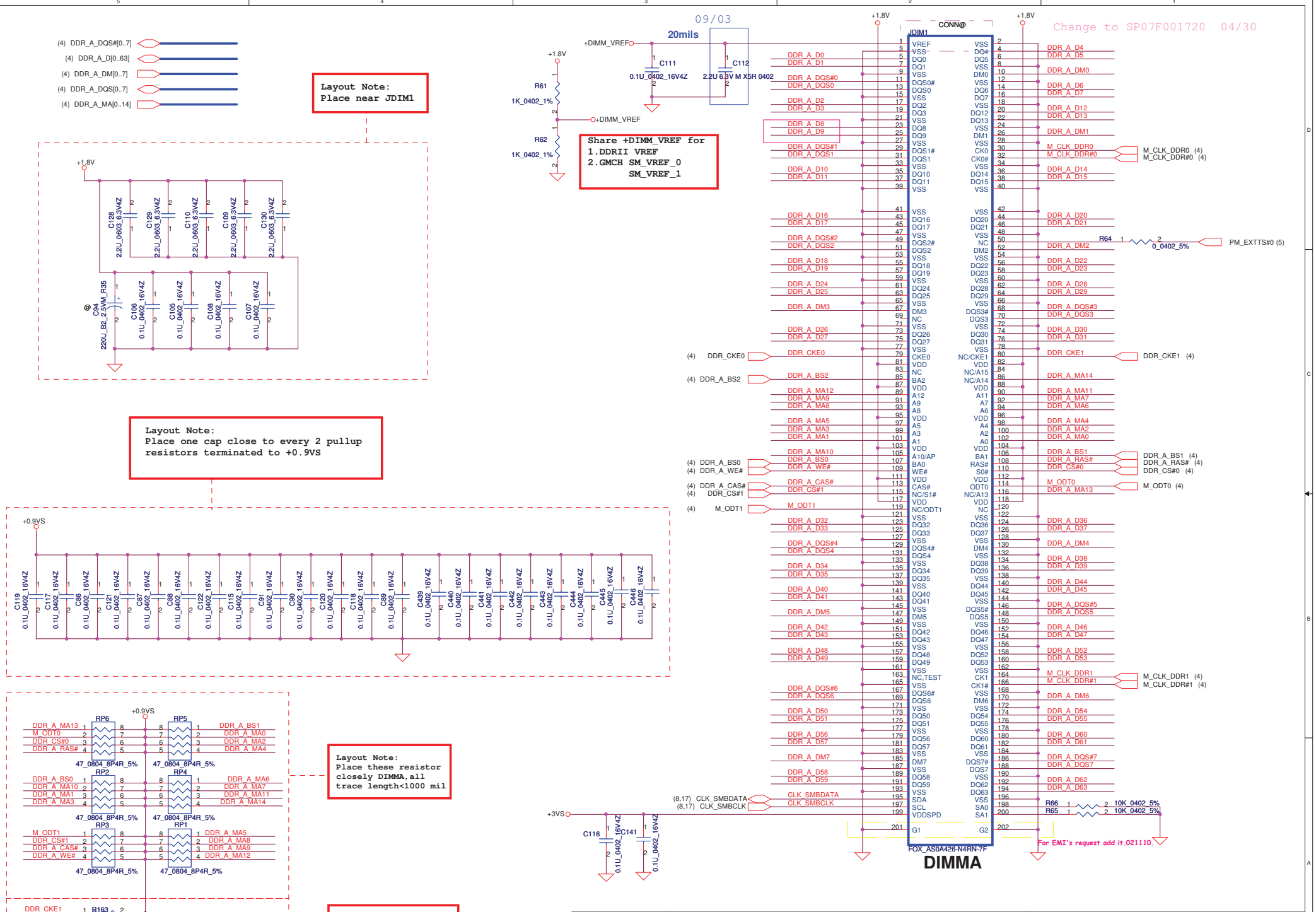

Security Classification	Compal Secret Data		
Issued Date	2006/08/18	Deciphered Date	2007/8/18

THIS SHEET OF ENGINEERING DRAWING IS THE PROPRIETARY PROPERTY OF COMPAL ELECTRONICS, INC. AND CONTAINS CONFIDENTIAL AND TRADE SECRET INFORMATION. THIS SHEET MAY NOT BE TRANSFERED FROM THE CUSTODY OF THE COMPETENT DIVISION OF R&D DEPARTMENT EXCEPT AS AUTHORIZED BY COMPAL ELECTRONICS, INC. NEITHER THIS SHEET NOR THE INFORMATION IT CONTAINS MAY BE USED BY OR DISCLOSED TO ANY THIRD PARTY WITHOUT PRIOR WRITTEN CONSENT OF COMPAL ELECTRONICS, INC.

Compal Electronics, Inc.

Title: DDRII-SODIMMA

Size: B | Document Number: NAV51 LA-6311P | Rev: 1.0

Date: Tuesday, April 13, 2010 | Sheet 7 of 33

FSC CLKSEL2	FSB CLKSEL1	FSA CLKSEL0	CPU MHz	SRC MHz	PCI MHz	REF MHz	DOT_96 MHz	USB MHz
0	0	0	266	100	33.3	14.318	96.0	48.0
0	0	1	133	100	33.3	14.318	96.0	48.0
0	1	0	200	100	33.3	14.318	96.0	48.0
0	1	1	166	100	33.3	14.318	96.0	48.0
1	0	0	333	100	33.3	14.318	96.0	48.0
1	0	1	100	100	33.3	14.318	96.0	48.0
1	1	0	400	100	33.3	14.318	96.0	48.0
1	1	1	Reserved					

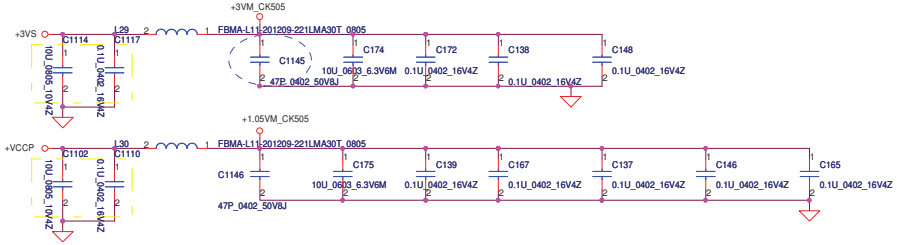

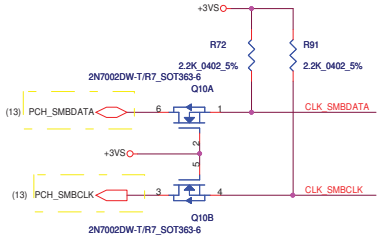

SA00003H730 (Realtek :RTM890N-397-VC-GRT)

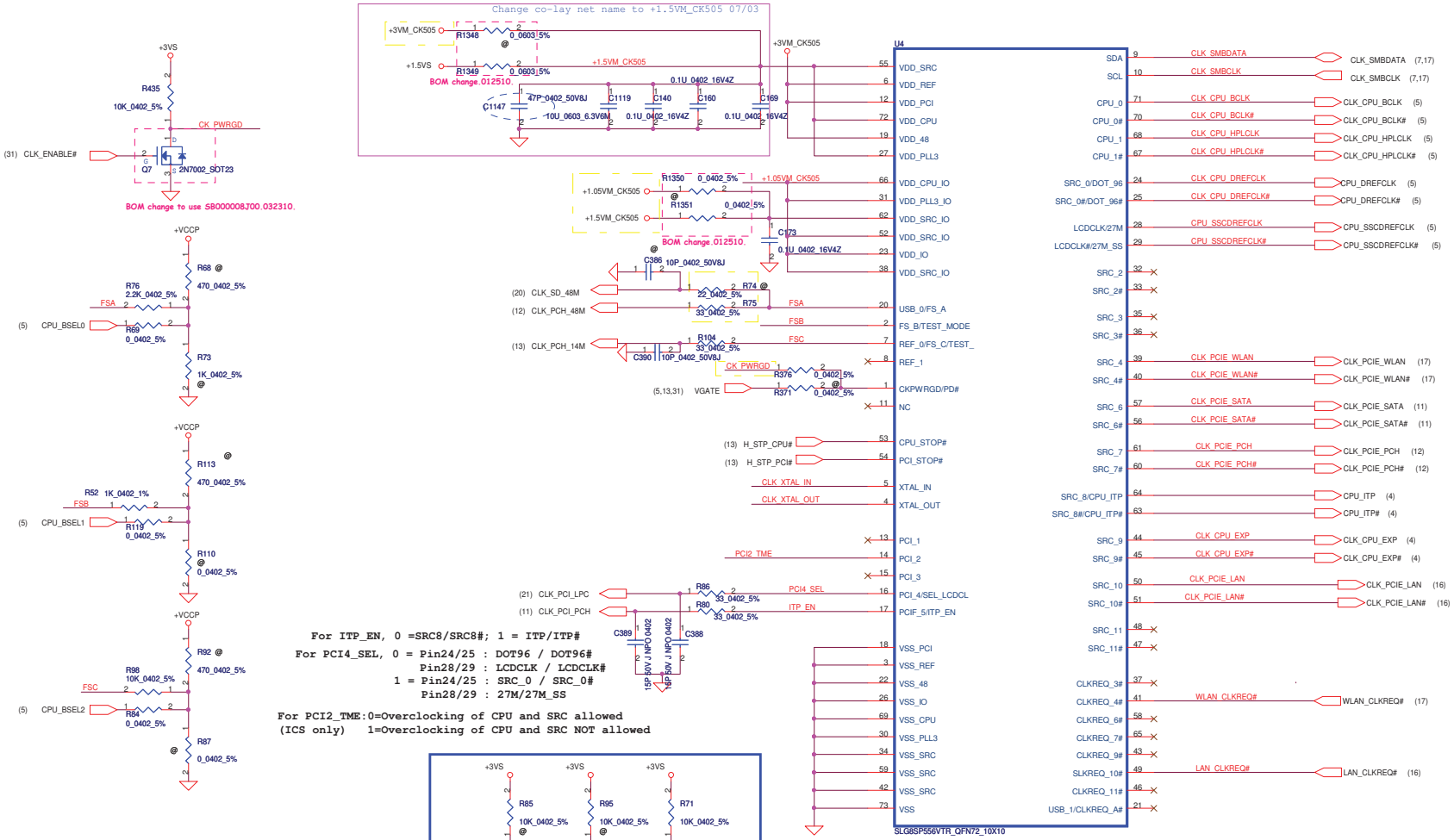

For ITP_EN, 0 =SRC8/SRC8#; 1 = ITP/ITP#
For PCI4_SEL, 0 = Pin24/25 : DOT96 / DOT96#
Pin28/29 : LCDCLK / LCDCLK#
1 = Pin24/25 : SRC_0 / SRC_0#
Pin28/29 : 27M/27M_SS

For PCI2_TME:0=Overclocking of CPU and SRC allowed
(ICS only) 1=Overclocking of CPU and SRC NOT allowed

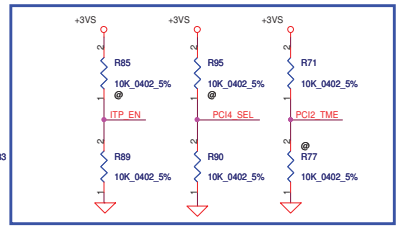

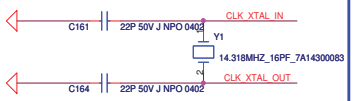

Routing the trace at least 10mil

SRC PORT LIST

PORT	DEVICE
SRC1	CPU_SSCDREFCLK
SRC2	
SRC3	
SRC4	PCIE_WLAN
SRC6	PCIE_SATA
SRC7	PCIE_PCH
SRC8	CPU_ITP
SRC9	CLK_CPU_EXP
SRC10	PCIE_LAN
SRC11	

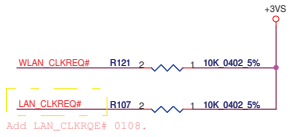

REQ PORT LIST

PORT	DEVICE
REQ_3#	
REQ_4#	PCIE_WLAN
REQ_6#	
REQ_7#	
REQ_9#	
REQ_10#	PCIE_LAN
REQ_11#	
REQ_A#	

Security Classification	Compal Secret Data		
Issued Date	2007/10/15	Deciphered Date	2008/10/15

THIS SHEET OF ENGINEERING DRAWING IS THE PROPRIETARY PROPERTY OF COMPAL ELECTRONICS, INC. AND CONTAINS CONFIDENTIAL AND TRADE SECRET INFORMATION. THIS SHEET MAY NOT BE TRANSFERED FROM THE CUSTODY OF THE COMPETENT DIVISION OF R&D DEPARTMENT EXCEPT AS AUTHORIZED BY COMPAL ELECTRONICS, INC. NEITHER THIS SHEET NOR THE INFORMATION IT CONTAINS MAY BE USED BY OR DISCLOSED TO ANY THIRD PARTY WITHOUT PRIOR WRITTEN CONSENT OF COMPAL ELECTRONICS, INC.

Compal Electronics, Inc.

Title: Clock Generator CK505

Size | Document Number: NAV51 LA-6311P | Rev: 1.0

Date: Tuesday, April 13, 2010 | Sheet 8 of 33

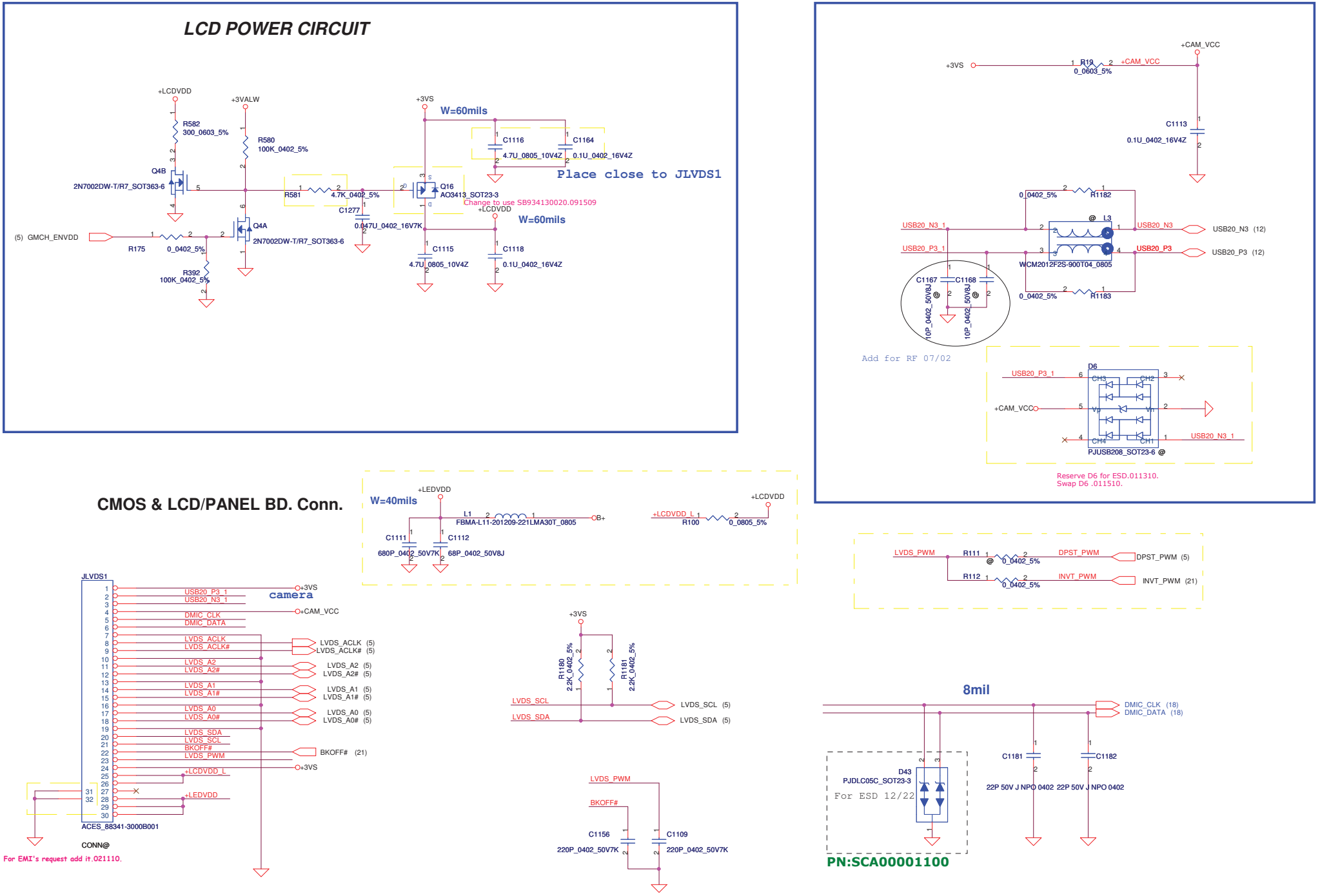

Security Classification	Compal Secret Data		
Issued Date	2006/08/18	Deciphered Date	2007/8/18

THIS SHEET OF ENGINEERING DRAWING IS THE PROPRIETARY PROPERTY OF COMPAL ELECTRONICS, INC. AND CONTAINS CONFIDENTIAL AND TRADE SECRET INFORMATION. THIS SHEET MAY NOT BE TRANSFERED FROM THE CUSTODY OF THE COMPETENT DIVISION OF R&D DEPARTMENT EXCEPT AS AUTHORIZED BY COMPAL ELECTRONICS, INC. NEITHER THIS SHEET NOR THE INFORMATION IT CONTAINS MAY BE USED BY OR DISCLOSED TO ANY THIRD PARTY WITHOUT PRIOR WRITTEN CONSENT OF COMPAL ELECTRONICS, INC.

Compal Electronics, Inc.

Title: LVDS /INVERTER

Size: B | Document Number: NAV51 LA-6311P | Rev: 1.0

Date: Tuesday, April 13, 2010 | Sheet 9 of 33

Close to CRT CONN for ESD.

add it for EMI.021110.

Modify C31- C308 C303 C307 C306 C304 BOM Structure 0615

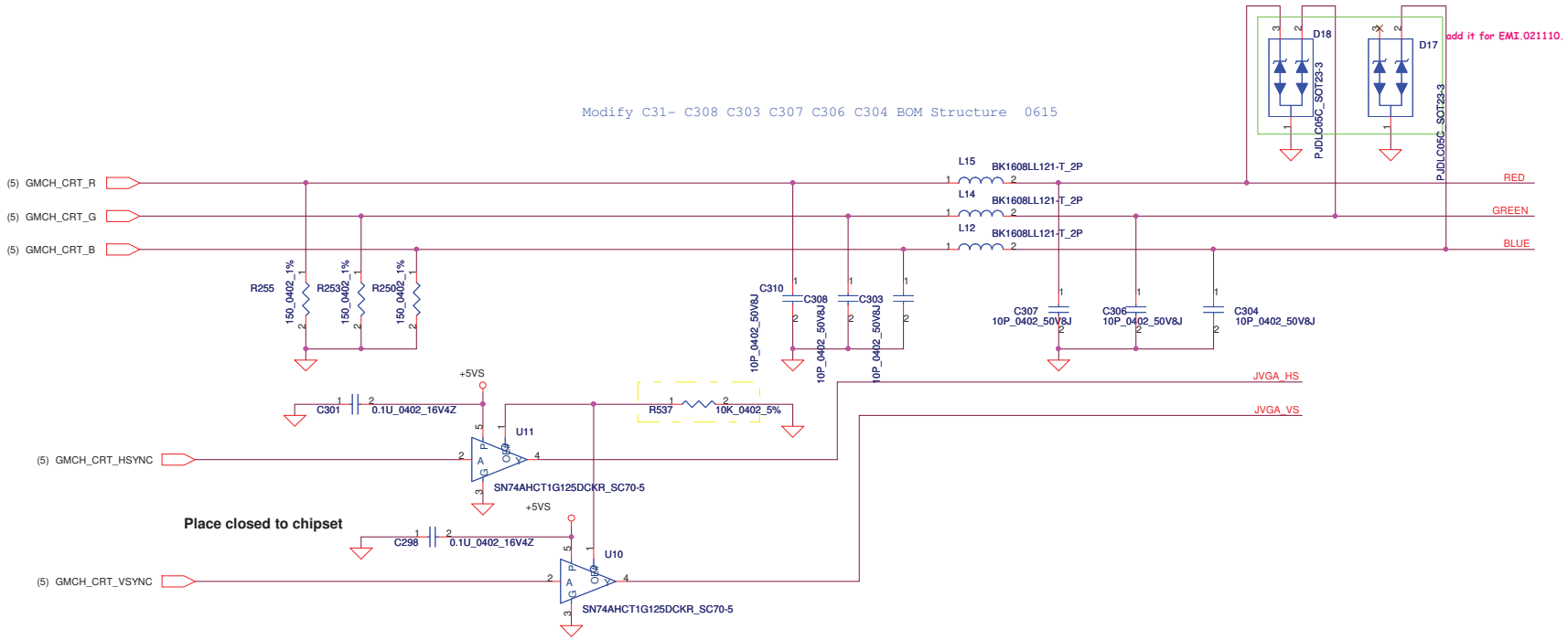

Add R1283 R1284
Change R247 R249 to 10 ohm
Add @ on U10 U11 C301 C298 06/08

CRT PORT

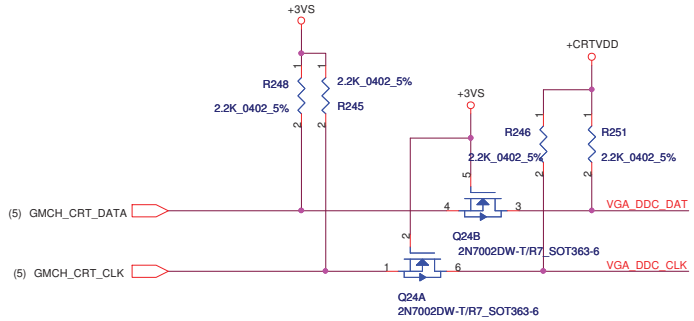

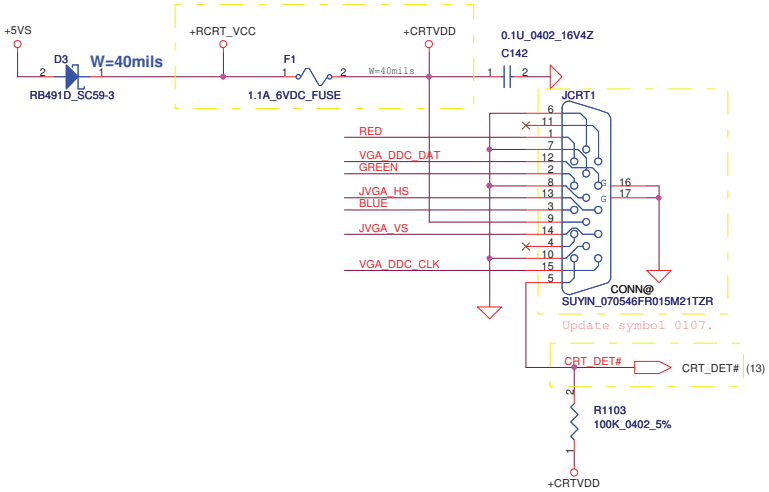

Security Classification	Compal Secret Data		
Issued Date	2006/08/18	Deciphered Date	2007/8/18

THIS SHEET OF ENGINEERING DRAWING IS THE PROPRIETARY PROPERTY OF COMPAL ELECTRONICS, INC. AND CONTAINS CONFIDENTIAL AND TRADE SECRET INFORMATION. THIS SHEET MAY NOT BE TRANSFERED FROM THE CUSTODY OF THE COMPETENT DIVISION OF R&D DEPARTMENT EXCEPT AS AUTHORIZED BY COMPAL ELECTRONICS, INC. NEITHER THIS SHEET NOR THE INFORMATION IT CONTAINS MAY BE USED BY OR DISCLOSED TO ANY THIRD PARTY WITHOUT PRIOR WRITTEN CONSENT OF COMPAL ELECTRONICS, INC.

Compal Electronics, Inc.

Title: CRT PORT

Size: B | Document Number: NAV51 LA-6311P | Rev: 0.2

Date: Tuesday, April 13, 2010 | Sheet 10 of 33

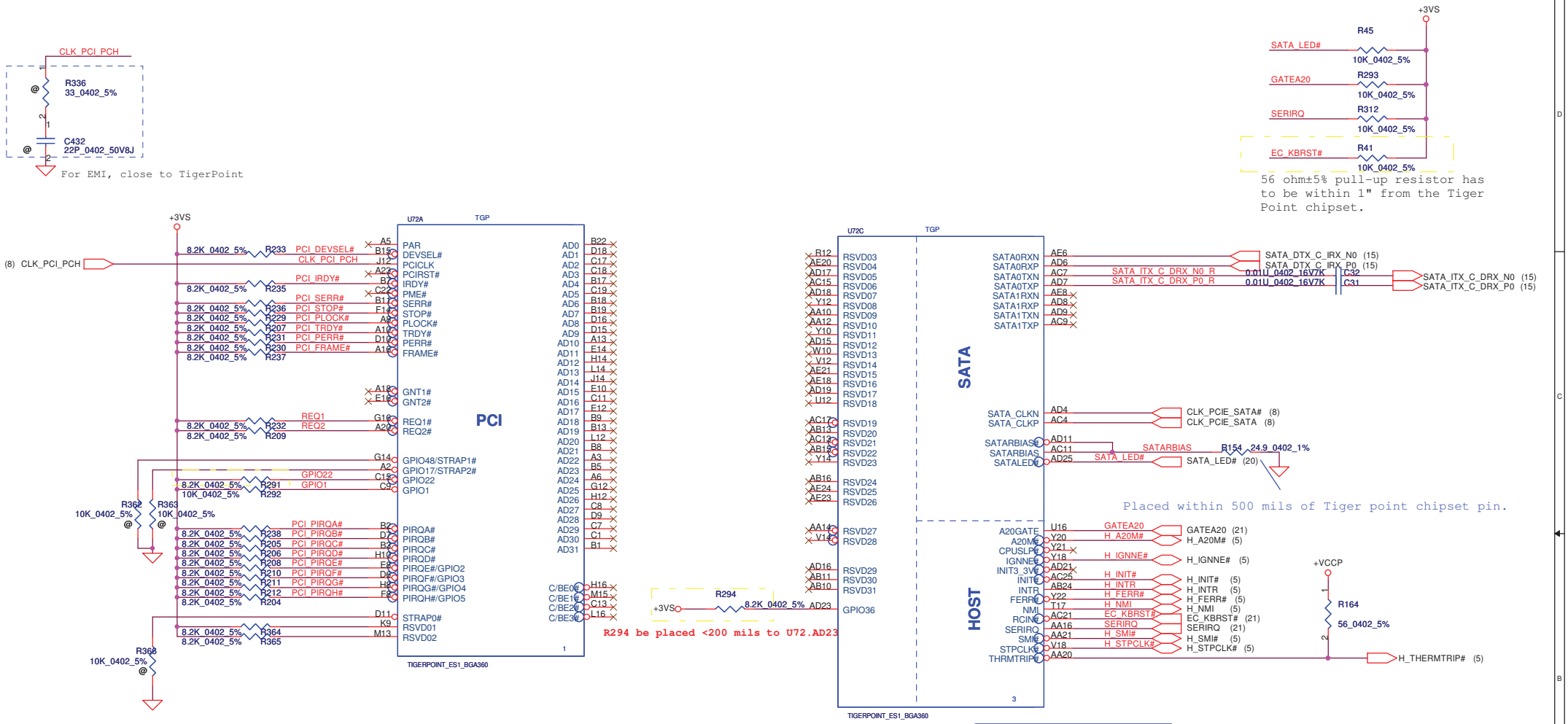

STRAP2# GPIO17	STRAP1# GPIO48	Boot BIOS
0	1	SPI
1	0	PCI
1	1	LPC

Security Classification	Compal Secret Data		
Issued Date	2006/08/18	Deciphered Date	2007/8/18

THIS SHEET OF ENGINEERING DRAWING IS THE PROPRIETARY PROPERTY OF COMPAL ELECTRONICS, INC. AND CONTAINS CONFIDENTIAL AND TRADE SECRET INFORMATION. THIS SHEET MAY NOT BE TRANSFERED FROM THE CUSTODY OF THE COMPETENT DIVISION OF R&D DEPARTMENT EXCEPT AS AUTHORIZED BY COMPAL ELECTRONICS, INC. NEITHER THIS SHEET NOR THE INFORMATION IT CONTAINS MAY BE USED BY OR DISCLOSED TO ANY THIRD PARTY WITHOUT PRIOR WRITTEN CONSENT OF COMPAL ELECTRONICS, INC.

Compal Electronics, Inc.

Title: Tigerpoint(1/4)

Size | Document Number: NAV51 LA-6311P | Rev: 1.0

Date: Tuesday, April 13, 2010 | Sheet 11 of 33

PCIE	Port List
1	LAN
2	WLAN
3	
4	

USB	Port List
0	USB Left1
1	USB Left2
2	
3	CMOS
4	CardReader
5	
6	BT
7	WLAN

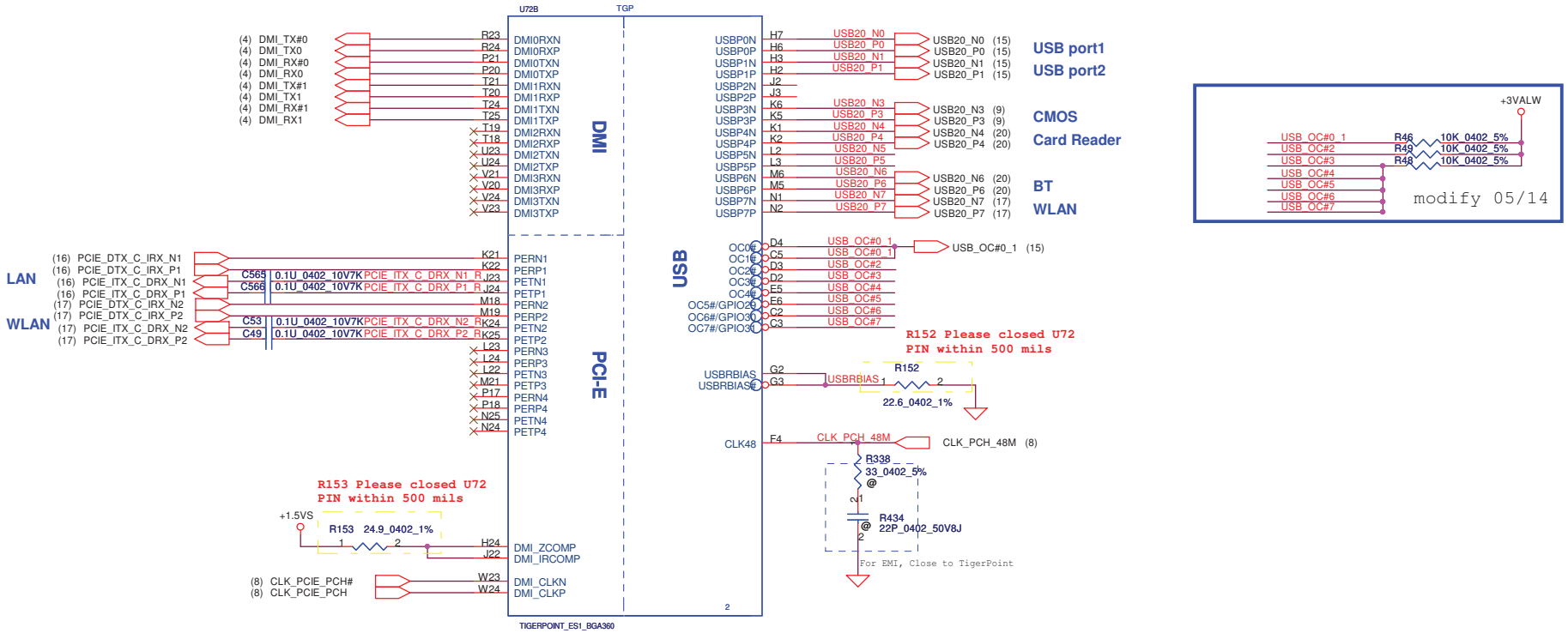

Security Classification	Compal Secret Data		
Issued Date	2006/08/18	Deciphered Date	2007/8/18

THIS SHEET OF ENGINEERING DRAWING IS THE PROPRIETARY PROPERTY OF COMPAL ELECTRONICS, INC. AND CONTAINS CONFIDENTIAL AND TRADE SECRET INFORMATION. THIS SHEET MAY NOT BE TRANSFERED FROM THE CUSTODY OF THE COMPETENT DIVISION OF R&D DEPARTMENT EXCEPT AS AUTHORIZED BY COMPAL ELECTRONICS, INC. NEITHER THIS SHEET NOR THE INFORMATION IT CONTAINS MAY BE USED BY OR DISCLOSED TO ANY THIRD PARTY WITHOUT PRIOR WRITTEN CONSENT OF COMPAL ELECTRONICS, INC.

Compal Electronics, Inc.

Title: Tigerpoint(2/4)

Size: Custom | Document Number: NAV51 LA-6311P | Rev: 1.0

Date: Tuesday, April 13, 2010 | Sheet 12 of 33

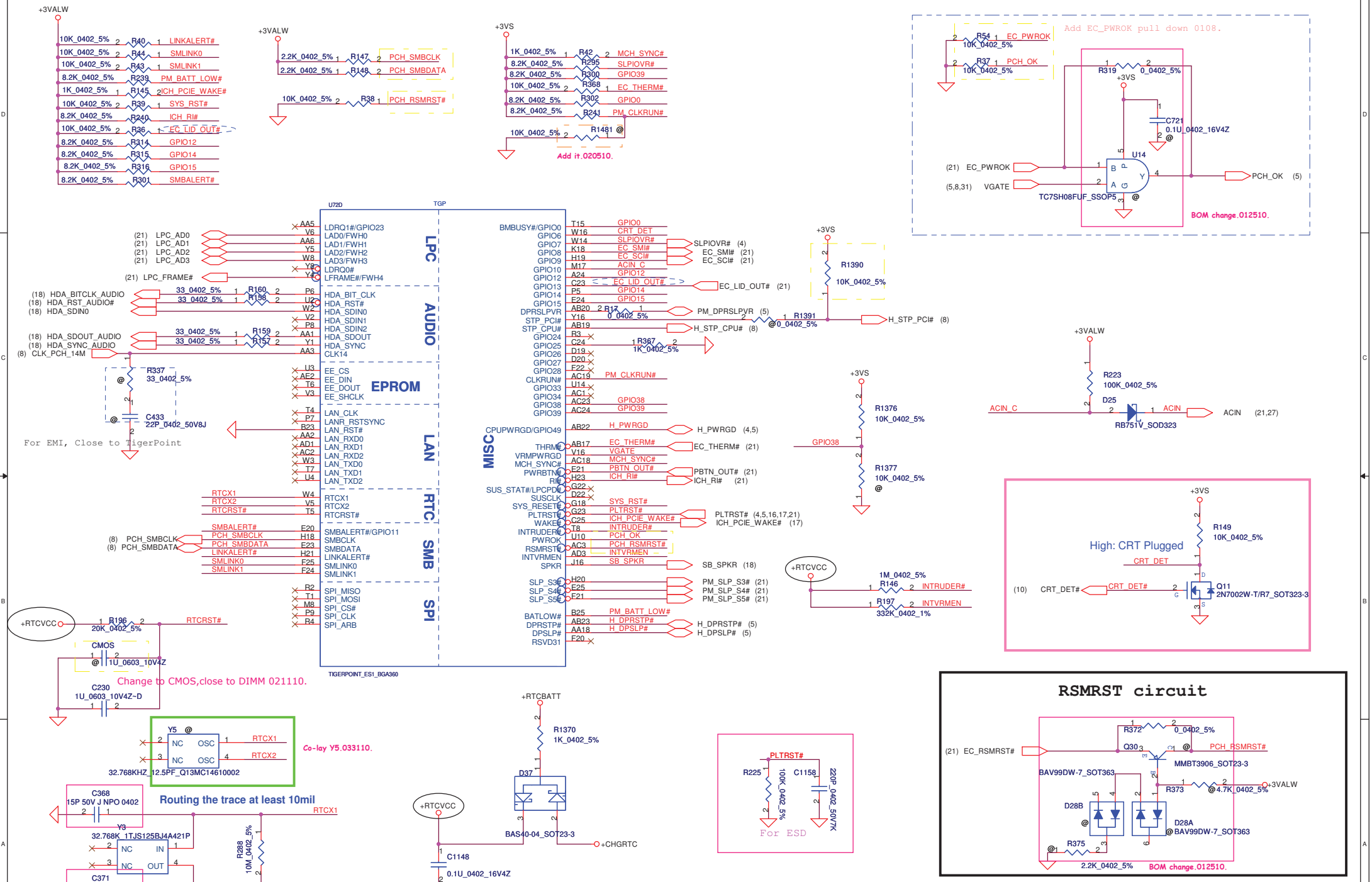

Security Classification	Compal Secret Data		
Issued Date	2006/08/18	Deciphered Date	2007/8/18

THIS SHEET OF ENGINEERING DRAWING IS THE PROPRIETARY PROPERTY OF COMPAL ELECTRONICS, INC. AND CONTAINS CONFIDENTIAL AND TRADE SECRET INFORMATION. THIS SHEET MAY NOT BE TRANSFERED FROM THE CUSTODY OF THE COMPETENT DIVISION OF R&D DEPARTMENT EXCEPT AS AUTHORIZED BY COMPAL ELECTRONICS, INC. NEITHER THIS SHEET NOR THE INFORMATION IT CONTAINS MAY BE USED BY OR DISCLOSED TO ANY THIRD PARTY WITHOUT PRIOR WRITTEN CONSENT OF COMPAL ELECTRONICS, INC.

Compal Electronics, Inc.

Title: Tigerpoint(3/4)

Size: Custom | Document Number: NAV51 LA-6311P | Rev: 1.0

Date: Tuesday, April 13, 2010 | Sheet 13 of 33

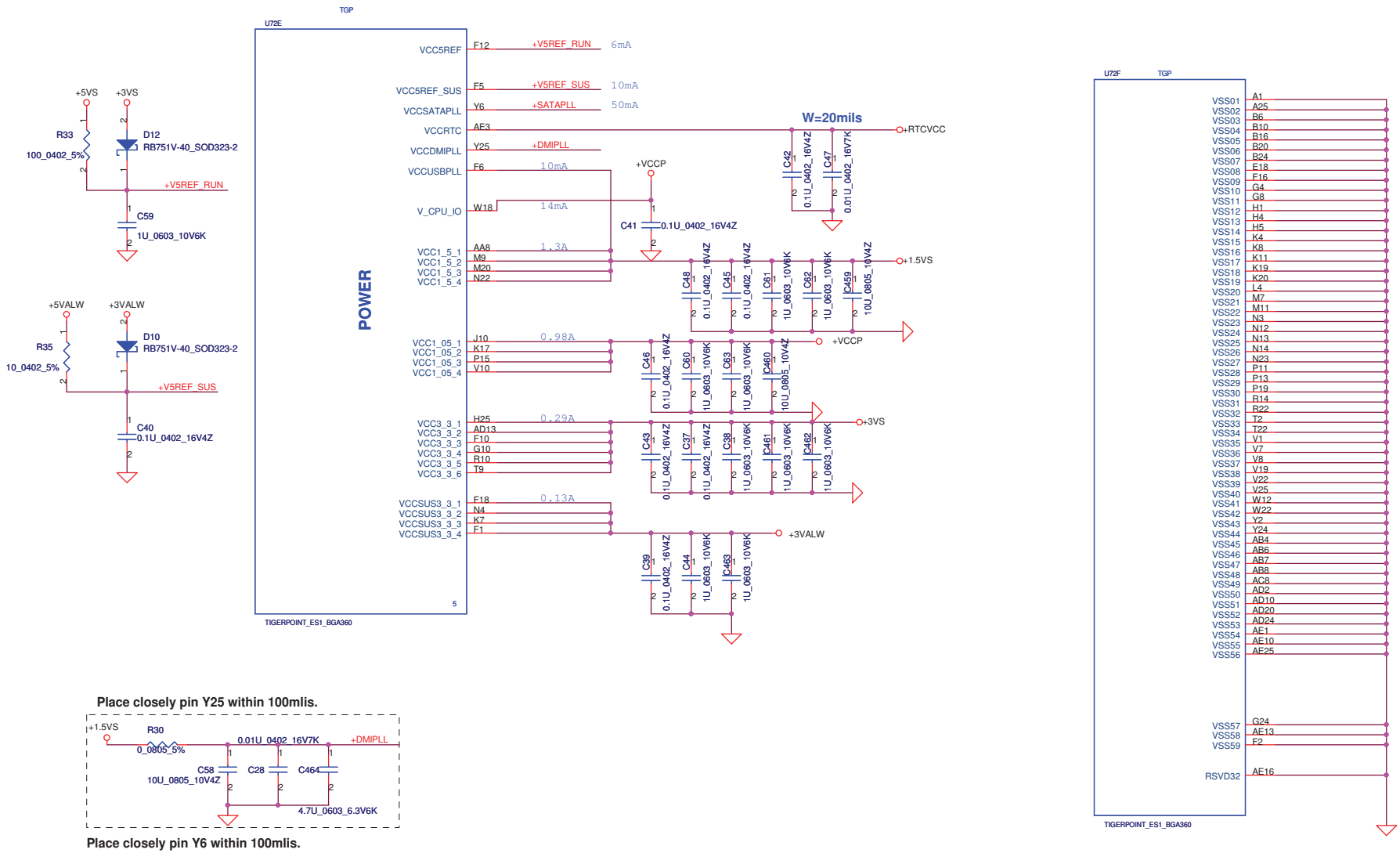

Place closely pin Y25 within 100mlis.

Place closely pin Y6 within 100mlis.

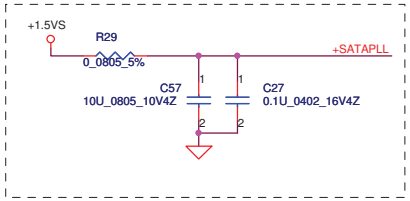

Security Classification	Compal Secret Data		
Issued Date	2009/04/15	Deciphered Date	2010/04/15

THIS SHEET OF ENGINEERING DRAWING IS THE PROPRIETARY PROPERTY OF COMPAL ELECTRONICS, INC. AND CONTAINS CONFIDENTIAL AND TRADE SECRET INFORMATION. THIS SHEET MAY NOT BE TRANSFERED FROM THE CUSTODY OF THE COMPETENT DIVISION OF R&D DEPARTMENT EXCEPT AS AUTHORIZED BY COMPAL ELECTRONICS, INC. NEITHER THIS SHEET NOR THE INFORMATION IT CONTAINS MAY BE USED BY OR DISCLOSED TO ANY THIRD PARTY WITHOUT PRIOR WRITTEN CONSENT OF COMPAL ELECTRONICS, INC.

Compal Electronics, Inc.

Title: Tigerpoint(4/4)

Size: Custom | Document Number: NAV51 LA-6311P | Rev: 0.1

Date: Tuesday, April 13, 2010 | Sheet 14 of 33

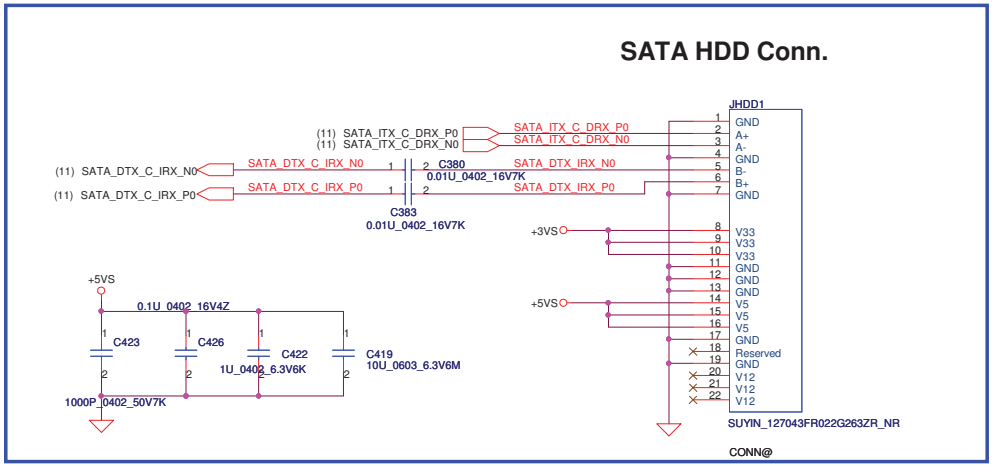

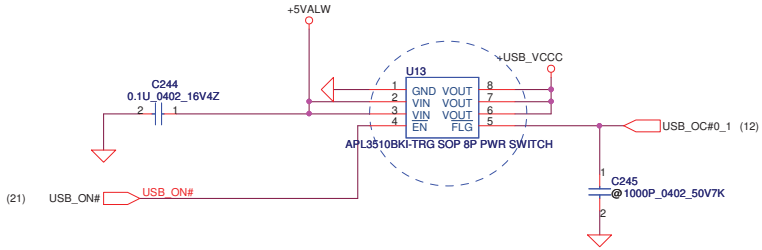

Change JUSB1 JUSB2 to NEW P/N SP010906181 06/23

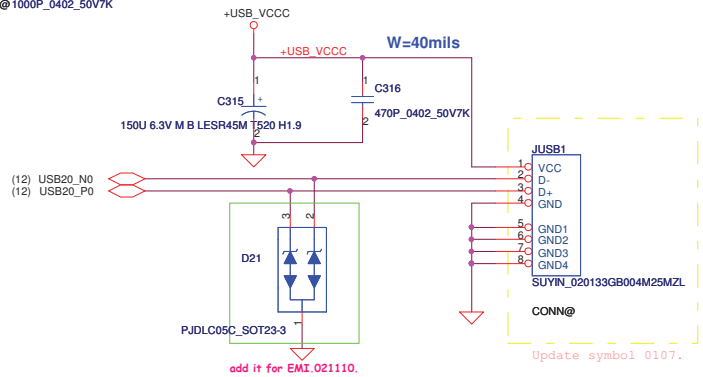

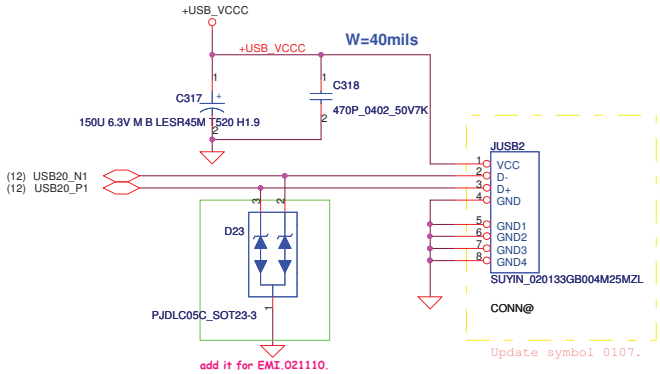

Security Classification	Compal Secret Data		
Issued Date	2006/08/18	Deciphered Date	2007/8/18

THIS SHEET OF ENGINEERING DRAWING IS THE PROPRIETARY PROPERTY OF COMPAL ELECTRONICS, INC. AND CONTAINS CONFIDENTIAL AND TRADE SECRET INFORMATION. THIS SHEET MAY NOT BE TRANSFERED FROM THE CUSTODY OF THE COMPETENT DIVISION OF R&D DEPARTMENT EXCEPT AS AUTHORIZED BY COMPAL ELECTRONICS, INC. NEITHER THIS SHEET NOR THE INFORMATION IT CONTAINS MAY BE USED BY OR DISCLOSED TO ANY THIRD PARTY WITHOUT PRIOR WRITTEN CONSENT OF COMPAL ELECTRONICS, INC.

Compal Electronics, Inc.

Title: SATA,CONN. / USB CONN.

Size: B | Document Number: NAV51 LA-6311P | Rev: 0.2

Date: Tuesday, April 13, 2010 | Sheet 15 of 33

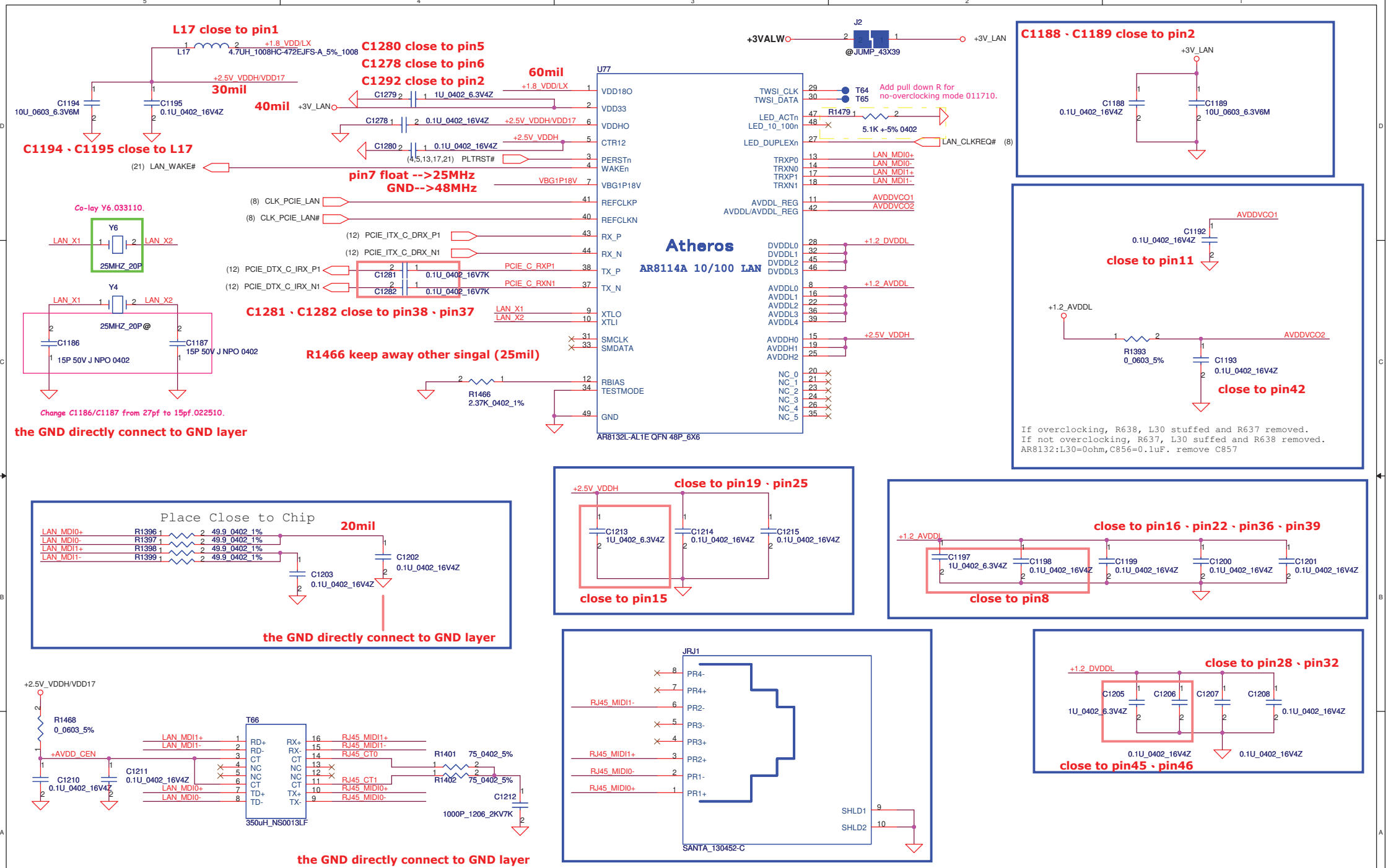

Security Classification	Compal Secret Data		
Issued Date	2006/08/18	Deciphered Date	2007/8/18

THIS SHEET OF ENGINEERING DRAWING IS THE PROPRIETARY PROPERTY OF COMPAL ELECTRONICS, INC. AND CONTAINS CONFIDENTIAL AND TRADE SECRET INFORMATION. THIS SHEET MAY NOT BE TRANSFERED FROM THE CUSTODY OF THE COMPETENT DIVISION OF R&D DEPARTMENT EXCEPT AS AUTHORIZED BY COMPAL ELECTRONICS, INC. NEITHER THIS SHEET NOR THE INFORMATION IT CONTAINS MAY BE USED BY OR DISCLOSED TO ANY THIRD PARTY WITHOUT PRIOR WRITTEN CONSENT OF COMPAL ELECTRONICS, INC.

Compal Electronics, Inc.

Title: Atheros 8131

Size: Custom | Document Number: NAV51 LA-6311P | Rev: 1.0

Date: Tuesday, April 13, 2010 | Sheet 16 of 33

Mini-Express Card for WLAN

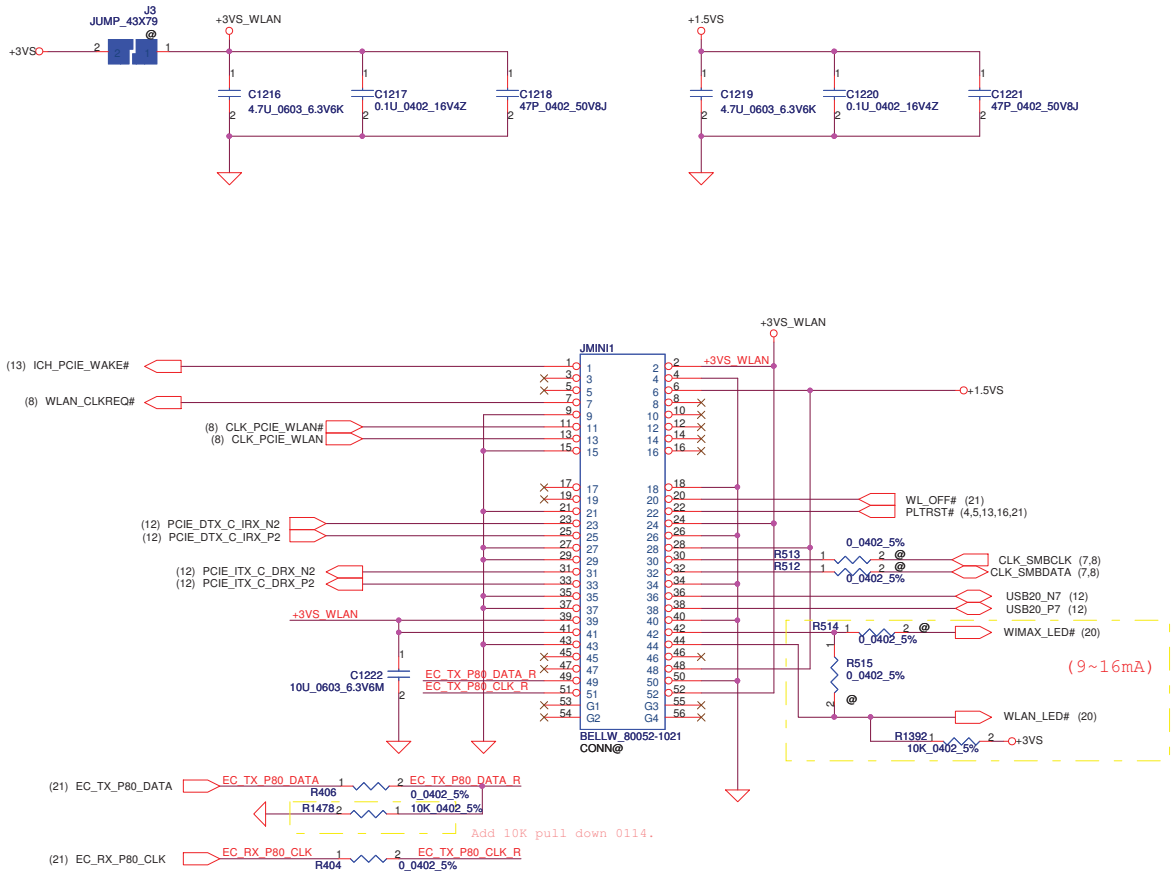

Compal Electronics, Inc.		
Title <Title>	WLAN	
Size Custom	Document Number NAV51 LA-6311P	Rev 0.1
Date: Tuesday, April 13, 2010	Sheet 17 of 33	

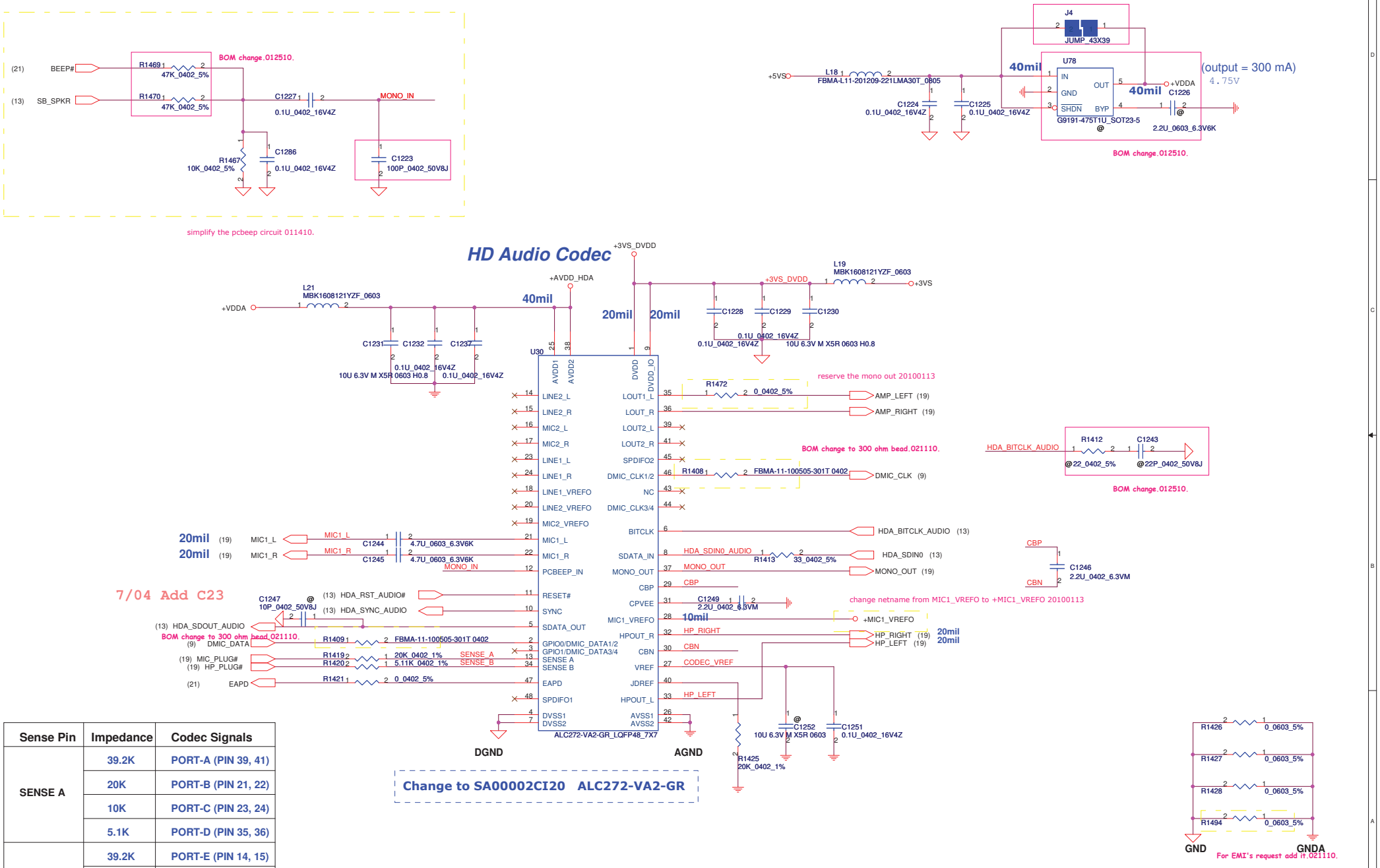

Sense Pin	Impedance	Codec Signals
SENSE A	39.2K	PORT-A (PIN 39, 41)
	20K	PORT-B (PIN 21, 22)
	10K	PORT-C (PIN 23, 24)
	5.1K	PORT-D (PIN 35, 36)
SENSE B	39.2K	PORT-E (PIN 14, 15)
	20K	PORT-F (PIN 16, 17)
	10K	PORT-G (PIN 43, 44)
	5.1K	PORT-H (PIN 45, 46)

Security Classification	Compal Secret Data		
Issued Date	2006/08/18	Deciphered Date	2007/8/18

THIS SHEET OF ENGINEERING DRAWING IS THE PROPRIETARY PROPERTY OF COMPAL ELECTRONICS, INC. AND CONTAINS CONFIDENTIAL AND TRADE SECRET INFORMATION. THIS SHEET MAY NOT BE TRANSFERED FROM THE CUSTODY OF THE COMPETENT DIVISION OF R&D DEPARTMENT EXCEPT AS AUTHORIZED BY COMPAL ELECTRONICS, INC. NEITHER THIS SHEET NOR THE INFORMATION IT CONTAINS MAY BE USED BY OR DISCLOSED TO ANY THIRD PARTY WITHOUT PRIOR WRITTEN CONSENT OF COMPAL ELECTRONICS, INC.

Compal Electronics, Inc.

Title: HD Audio Codec ALC272

Size: Custom | Document Number: NAV51 LA-6311P | Rev: 1.0

Date: Tuesday, April 13, 2010 | Sheet 18 of 33

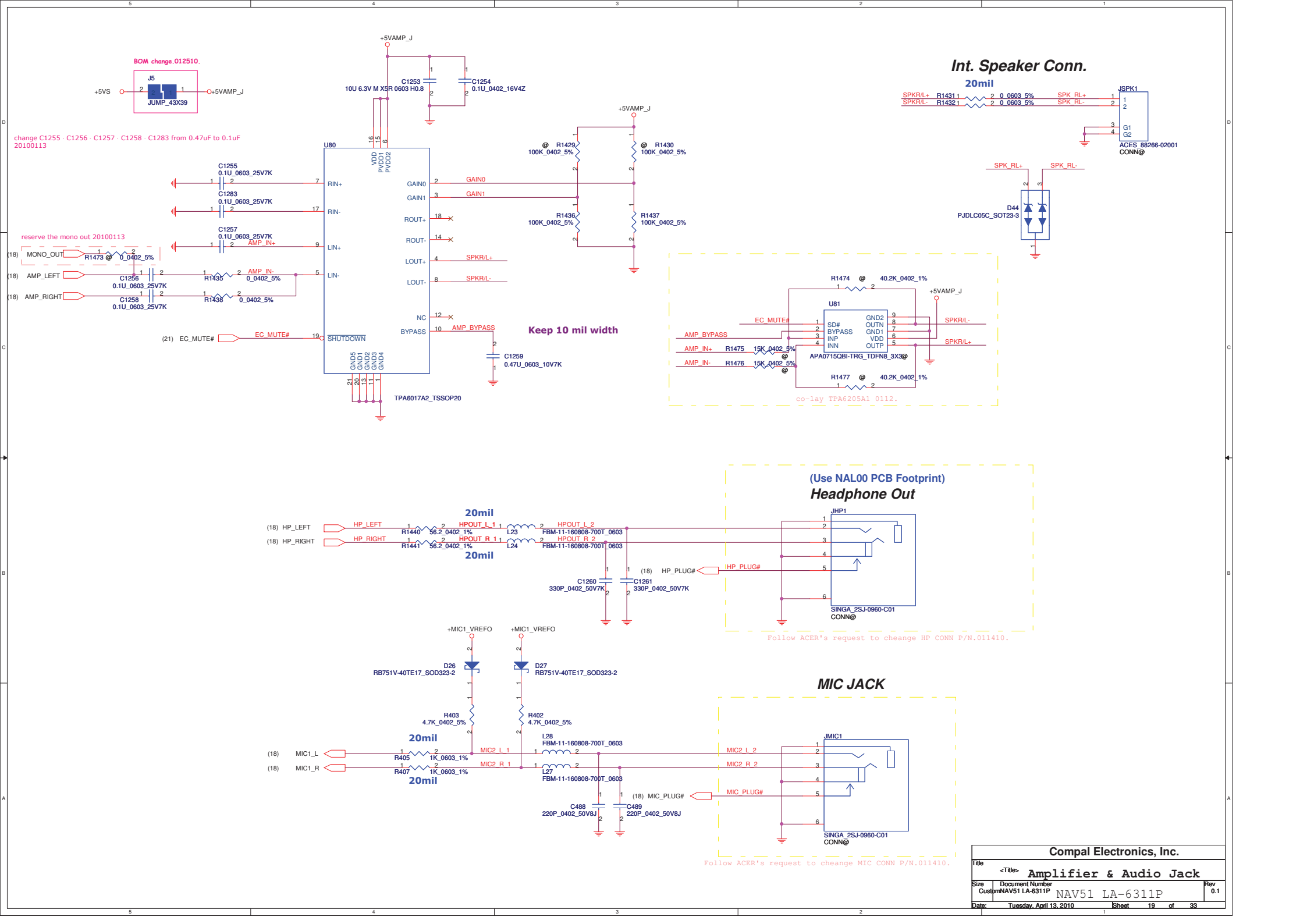
BOM change.012510.
J5
JUMP_43X39
+5VS
+5VAMP_J
change C1255 · C1256 · C1257 · C1258 · C1283 from 0.47uF to 0.1uF
20100113
reserve the mono out 20100113
U80
TPA6017A2_TSSOP20
RIN+
RIN-
LIN+
LIN-
SHUTDOWN
GAIN0
GAIN1
ROUT+
ROUT-
LOUT+
LOUT-
NC
BYPASS
VDD
PVDD1
PVDD2
GND1
GND2
GND3
GND4
GND5
C1253
10U 6.3V M X5R 0603 H0.8
C1254
0.1U_0402_16V4Z
C1255
0.1U_0603_25V7K
C1283
0.1U_0603_25V7K
C1257
0.1U_0603_25V7K
C1256
0.1U_0603_25V7K
C1258
0.1U_0603_25V7K
R1473 @ 0_0402_5%
R1435 0_0402_5%
R1438 0_0402_5%
(18) MONO_OUT
(18) AMP_LEFT
(18) AMP_RIGHT
(21) EC_MUTE#
AMP_IN+
AMP_IN-
AMP_BYPASS
SPKR/L+
SPKR/L-
C1259
0.47U_0603_10V7K
R1429 @ 100K_0402_5%
R1430 @ 100K_0402_5%
R1436 100K_0402_5%
R1437 100K_0402_5%
Keep 10 mil width
Int. Speaker Conn.
20mil
SPKR/L+ R1431 0_0603_5%
SPKR/L- R1432 0_0603_5%
SPK_RL+
SPK_RL-
JSPK1
ACES_88266-02001
CONN@
D44
PJDLC05C_SOT23-3
R1474 @ 40.2K_0402_1%
R1475 15K_0402_5% @
R1476 15K_0402_5% @
R1477 @ 40.2K_0402_1%
U81
SD#
BYPASS
INP
INN
GND2
OUTN
GND1
VDD
OUTP
APA0715QBI-TRG_TDFN8_3X3@
co-lay TPA6205A1 0112.
(Use NAL00 PCB Footprint)
Headphone Out
20mil
(18) HP_LEFT
(18) HP_RIGHT
HP_LEFT
HP_RIGHT
R1440 56.2_0402_1%
R1441 56.2_0402_1%
HPOUT_L_1
HPOUT_R_1
L23
L24
FBM-11-160808-700T_0603
HPOUT_L_2
HPOUT_R_2
C1260
330P_0402_50V7K
C1261
330P_0402_50V7K
(18) HP_PLUG#
HP_PLUG#
JHP1
SINGA_2SJ-0960-C01
CONN@
Follow ACER's request to cheange HP CONN P/N.011410.
+MIC1_VREFO
D26
RB751V-40TE17_SOD323-2
D27
RB751V-40TE17_SOD323-2
R403
4.7K_0402_5%
R402
4.7K_0402_5%
MIC JACK
20mil
(18) MIC1_L
(18) MIC1_R
R405 1K_0603_1%
R407 1K_0603_1%
MIC2_L_1
MIC2_R_1
L28
L27
FBM-11-160808-700T_0603
MIC2_L_2
MIC2_R_2
C488
220P_0402_50V8J
C489
220P_0402_50V8J
(18) MIC_PLUG#
MIC_PLUG#
JMIC1
SINGA_2SJ-0960-C01
CONN@
Follow ACER's request to cheange MIC CONN P/N.011410.
Compal Electronics, Inc.
Title
<Title> Amplifier & Audio Jack
Size Custom
Document Number NAV51 LA-6311P
NAV51 LA-6311P
Rev 0.1
Date: Tuesday, April 13, 2010
Sheet 19 of 33

LED PCB CONN.

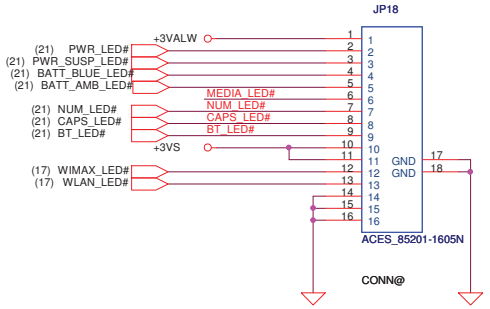

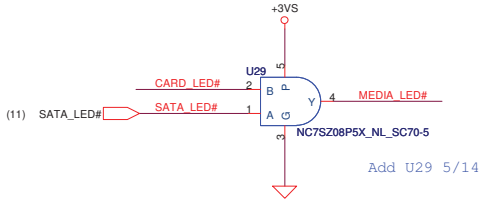

Add U29 5/14

BT Module CONN.

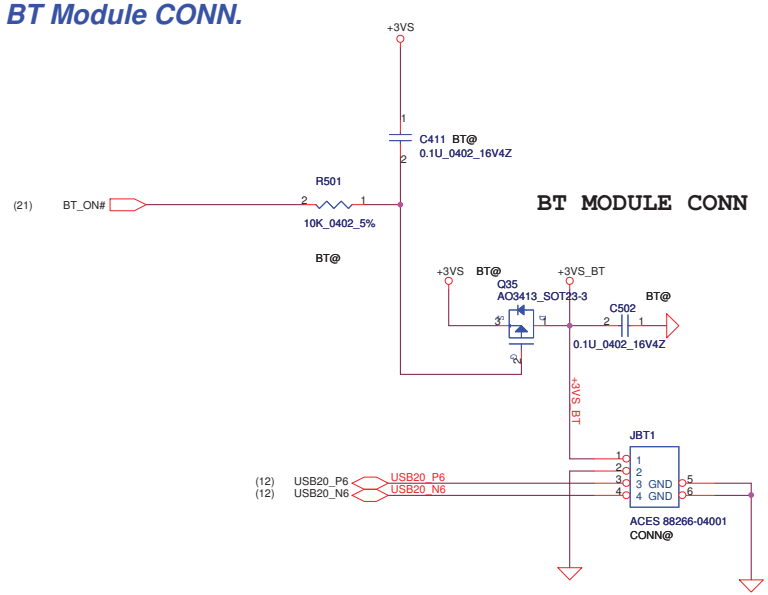

ESD

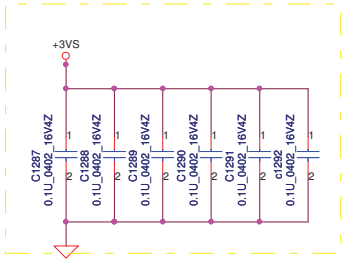

Add ESD soultion 032210.

Card Reader CONN.

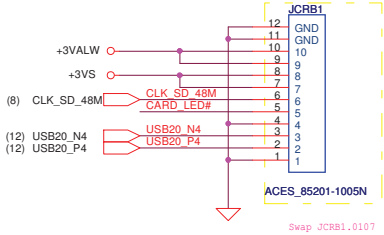

Swap JCRB1.0107

Security Classification	Compal Secret Data		
Issued Date	2009/01/22	Deciphered Date	2009/11/20

THIS SHEET OF ENGINEERING DRAWING IS THE PROPRIETARY PROPERTY OF COMPAL ELECTRONICS, INC. AND CONTAINS CONFIDENTIAL AND TRADE SECRET INFORMATION. THIS SHEET MAY NOT BE TRANSFERED FROM THE CUSTODY OF THE COMPETENT DIVISION OF R&D DEPARTMENT EXCEPT AS AUTHORIZED BY COMPAL ELECTRONICS, INC. NEITHER THIS SHEET NOR THE INFORMATION IT CONTAINS MAY BE USED BY OR DISCLOSED TO ANY THIRD PARTY WITHOUT PRIOR WRITTEN CONSENT OF COMPAL ELECTRONICS, INC.

Compal Electronics, Inc.

Title: **Card reader**

Size: Custom | Document Number: **NAV51 LA-6311P** | Rev: 0.1

Date: Tuesday, April 13, 2010 | Sheet 20 of 33

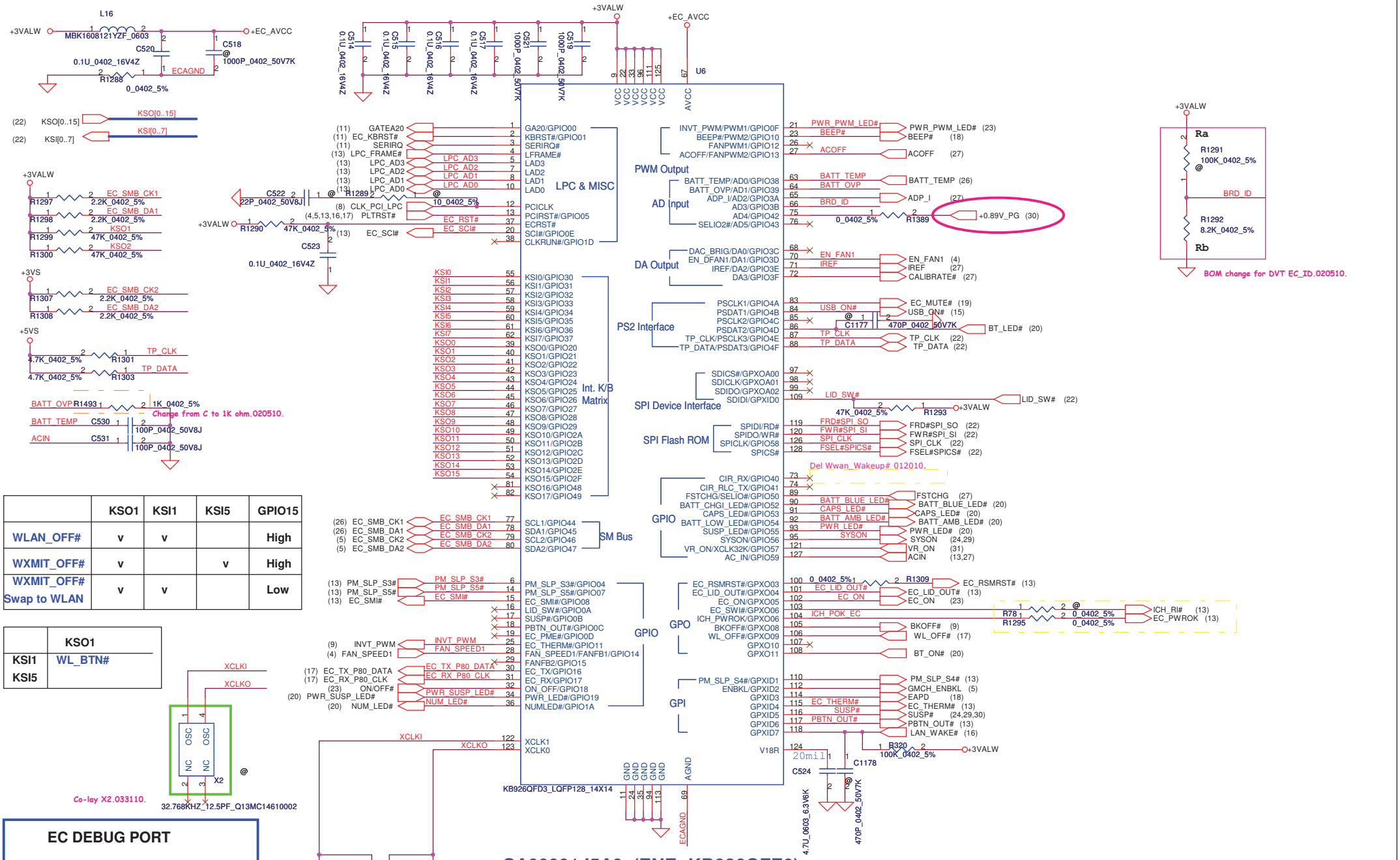

	KSO1	KSI1	KSI5	GPIO15
WLAN_OFF#	v	v		High
WXMIT_OFF#	v		v	High
WXMIT_OFF# Swap to WLAN	v	v		Low

	KSO1
KSI1	WL_BTN#
KSI5	

Security Classification	Compal Secret Data		
Issued Date	2006/08/04	Deciphered Date	2007/8/18

THIS SHEET OF ENGINEERING DRAWING IS THE PROPRIETARY PROPERTY OF COMPAL ELECTRONICS, INC. AND CONTAINS CONFIDENTIAL AND TRADE SECRET INFORMATION. THIS SHEET MAY NOT BE TRANSFERED FROM THE CUSTODY OF THE COMPETENT DIVISION OF R&D DEPARTMENT EXCEPT AS AUTHORIZED BY COMPAL ELECTRONICS, INC. NEITHER THIS SHEET NOR THE INFORMATION IT CONTAINS MAY BE USED BY OR DISCLOSED TO ANY THIRD PARTY WITHOUT PRIOR WRITTEN CONSENT OF COMPAL ELECTRONICS, INC.

Compal Electronics, Inc.

Title: KB926/BIOS

Size: Custom | Document Number: NAV51 LA-6311P | Rev: 1.0

Date: Tuesday, April 13, 2010 | Sheet 21 of 33

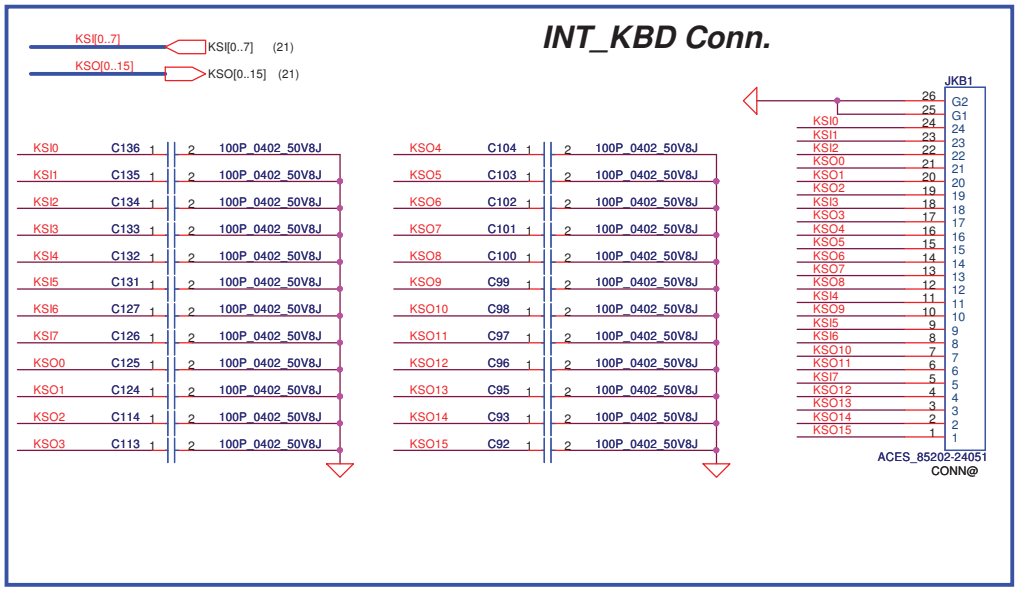

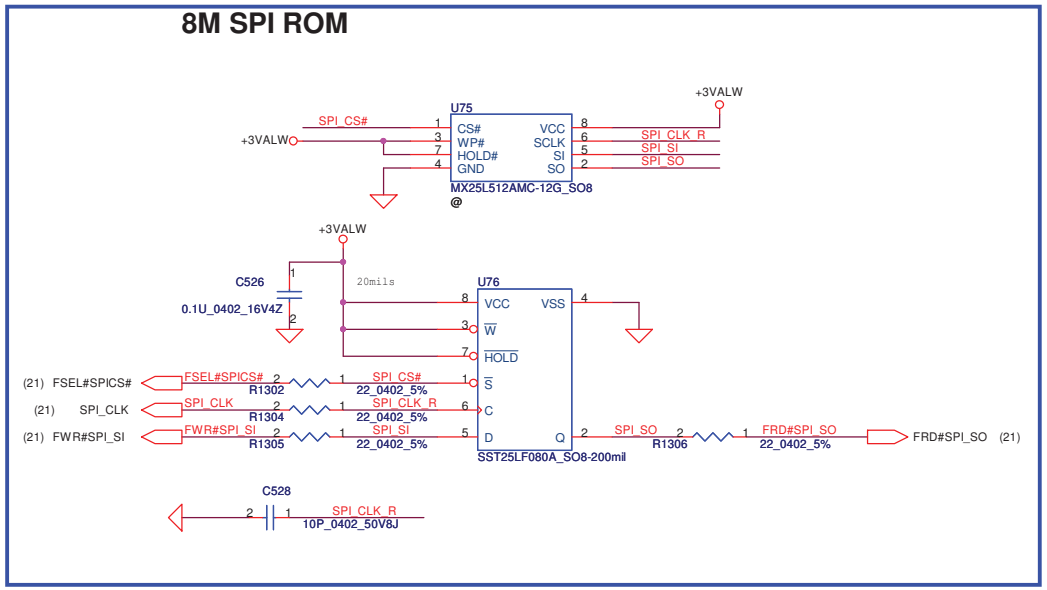

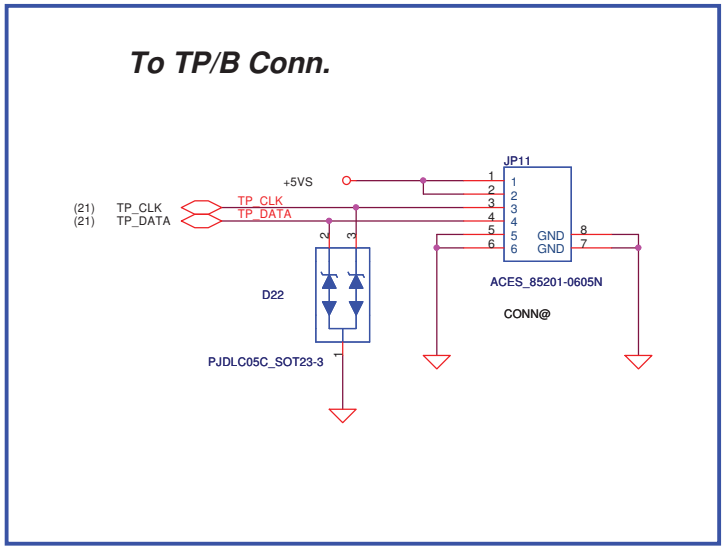

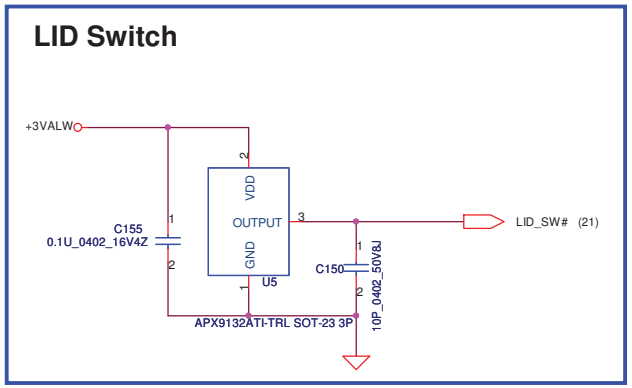

Security Classification	Compal Secret Data		
Issued Date	2006/08/18	Deciphered Date	2007/8/18

THIS SHEET OF ENGINEERING DRAWING IS THE PROPRIETARY PROPERTY OF COMPAL ELECTRONICS, INC. AND CONTAINS CONFIDENTIAL AND TRADE SECRET INFORMATION. THIS SHEET MAY NOT BE TRANSFERED FROM THE CUSTODY OF THE COMPETENT DIVISION OF R&D DEPARTMENT EXCEPT AS AUTHORIZED BY COMPAL ELECTRONICS, INC. NEITHER THIS SHEET NOR THE INFORMATION IT CONTAINS MAY BE USED BY OR DISCLOSED TO ANY THIRD PARTY WITHOUT PRIOR WRITTEN CONSENT OF COMPAL ELECTRONICS, INC.

Compal Electronics, Inc.

Title: KB CONN/TP/LID SW

Size: B | Document Number: NAV51 LA-6311P | Rev: 0.2

Date: Tuesday, April 13, 2010 | Sheet 22 of 33

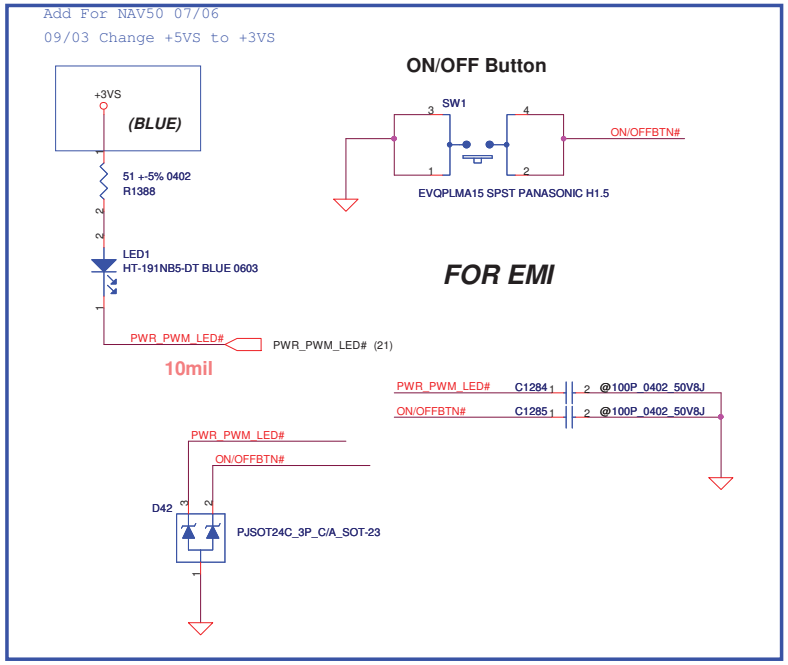

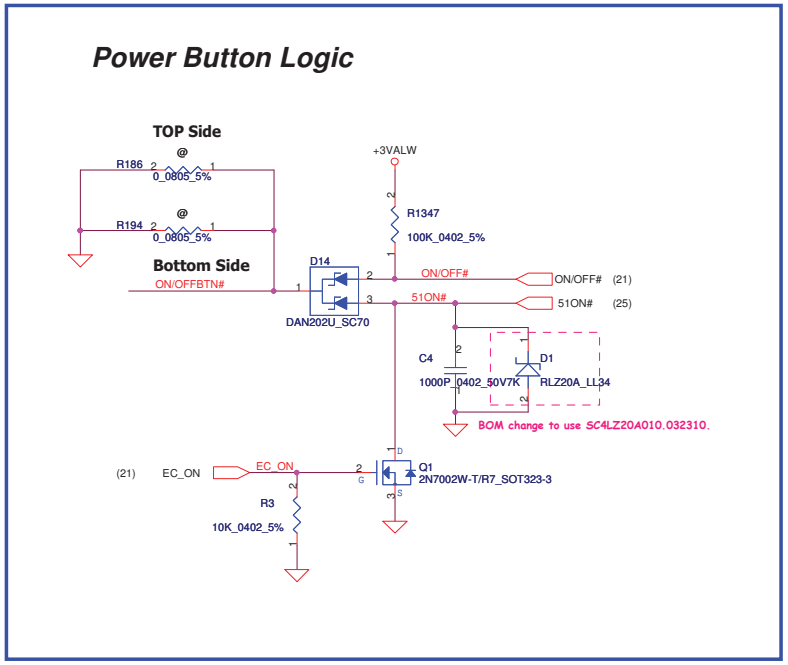

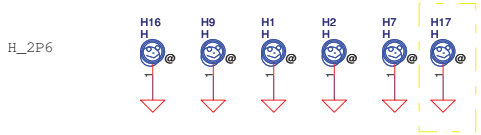

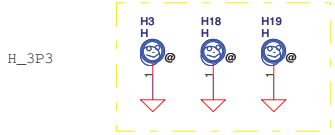

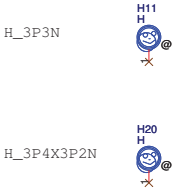

Security Classification	Compal Secret Data		
Issued Date	2006/08/18	Deciphered Date	2007/8/18

THIS SHEET OF ENGINEERING DRAWING IS THE PROPRIETARY PROPERTY OF COMPAL ELECTRONICS, INC. AND CONTAINS CONFIDENTIAL AND TRADE SECRET INFORMATION. THIS SHEET MAY NOT BE TRANSFERED FROM THE CUSTODY OF THE COMPETENT DIVISION OF R&D DEPARTMENT EXCEPT AS AUTHORIZED BY COMPAL ELECTRONICS, INC. NEITHER THIS SHEET NOR THE INFORMATION IT CONTAINS MAY BE USED BY OR DISCLOSED TO ANY THIRD PARTY WITHOUT PRIOR WRITTEN CONSENT OF COMPAL ELECTRONICS, INC.

Compal Electronics, Inc.

Title: ON/OFF / LID SW

Size: B | Document Number: NAV51 LA-6311P | Rev: 0.2

Date: Tuesday, April 13, 2010 | Sheet 23 of 33

+5VALW TO +5VS

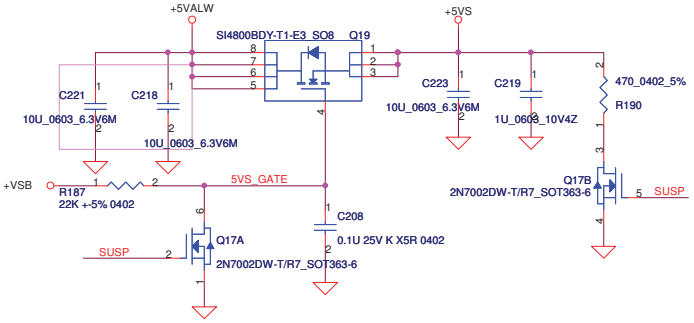

+3VALW TO +3VS

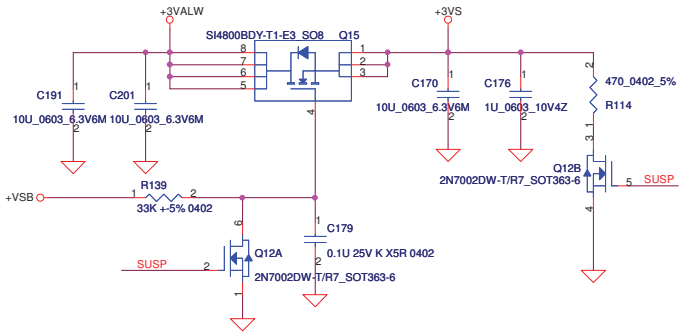

+1.8V to +1.8VS

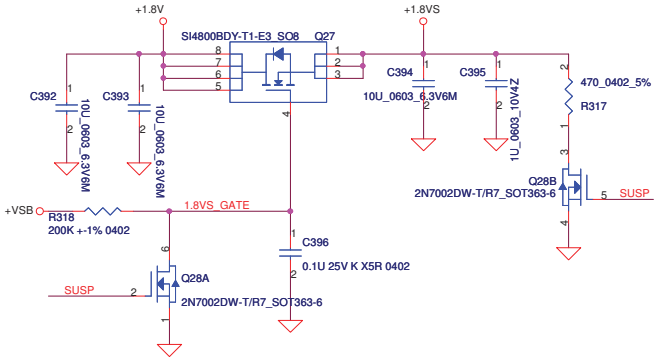

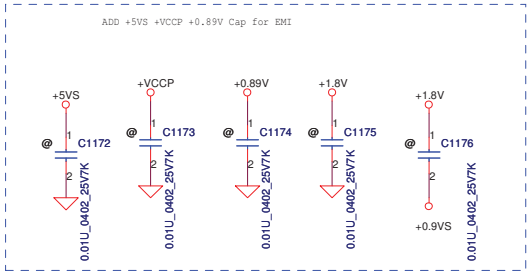

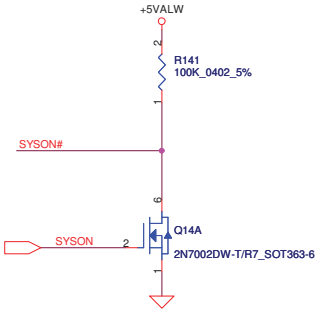

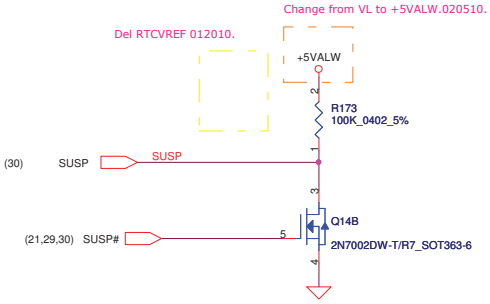

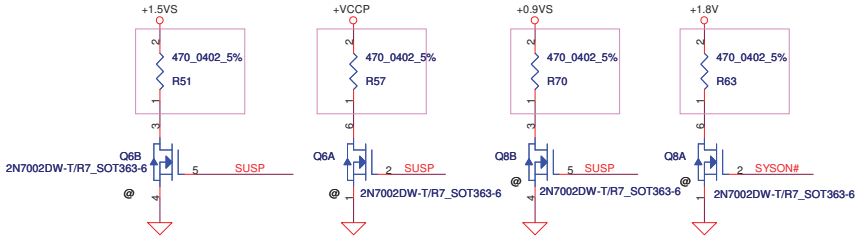

Security Classification	Compal Secret Data		
Issued Date	2006/08/18	Deciphered Date	2007/8/18

THIS SHEET OF ENGINEERING DRAWING IS THE PROPRIETARY PROPERTY OF COMPAL ELECTRONICS, INC. AND CONTAINS CONFIDENTIAL AND TRADE SECRET INFORMATION. THIS SHEET MAY NOT BE TRANSFERED FROM THE CUSTODY OF THE COMPETENT DIVISION OF R&D DEPARTMENT EXCEPT AS AUTHORIZED BY COMPAL ELECTRONICS, INC. NEITHER THIS SHEET NOR THE INFORMATION IT CONTAINS MAY BE USED BY OR DISCLOSED TO ANY THIRD PARTY WITHOUT PRIOR WRITTEN CONSENT OF COMPAL ELECTRONICS, INC.

Compal Electronics, Inc.

Title: DC INTERFACE

Size: B | Document Number: NAV51 LA-6311P | Rev: 0.2

Date: Tuesday, April 13, 2010 | Sheet 24 of 33

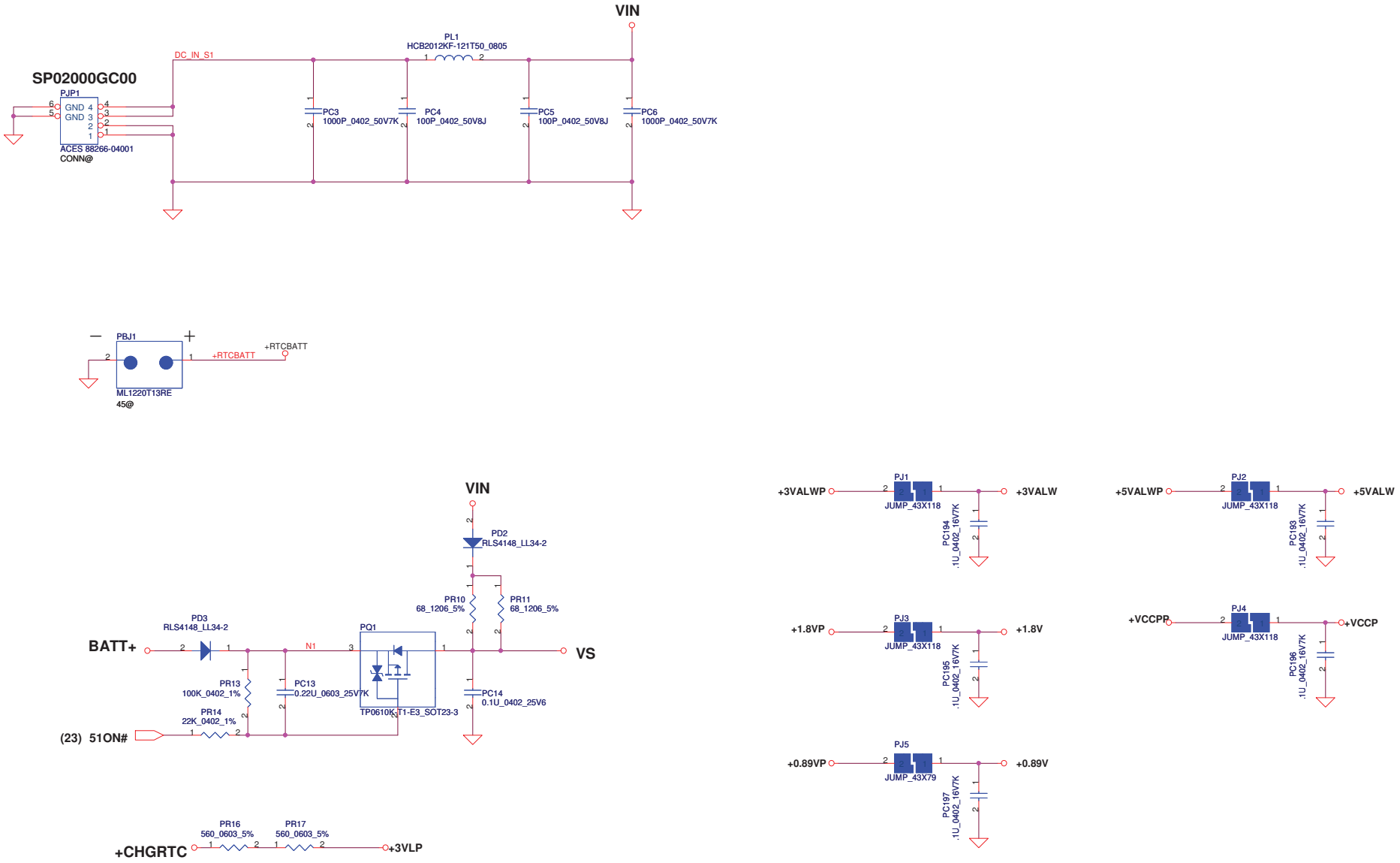

Security Classification	Compal Secret Data		
Issued Date	2007/09/20	Deciphered Date	2008/09/20

THIS SHEET OF ENGINEERING DRAWING IS THE PROPRIETARY PROPERTY OF COMPAL ELECTRONICS, INC. AND CONTAINS CONFIDENTIAL AND TRADE SECRET INFORMATION. THIS SHEET MAY NOT BE TRANSFERED FROM THE CUSTODY OF THE COMPETENT DIVISION OF R&D DEPARTMENT EXCEPT AS AUTHORIZED BY COMPAL ELECTRONICS, INC. NEITHER THIS SHEET NOR THE INFORMATION IT CONTAINS MAY BE USED BY OR DISCLOSED TO ANY THIRD PARTY WITHOUT PRIOR WRITTEN CONSENT OF COMPAL ELECTRONICS, INC.

Compal Electronics, Inc.

Title: DCIN & DETECTOR

Size: Custom | Document Number: NAV51 LA-6311P | Rev: 0.1

Date: Wednesday, April 14, 2010 | Sheet 25 of 32

PH1 under CPU botten side :
CPU thermal protection at 92 degree C
Recovery at 72 degree C

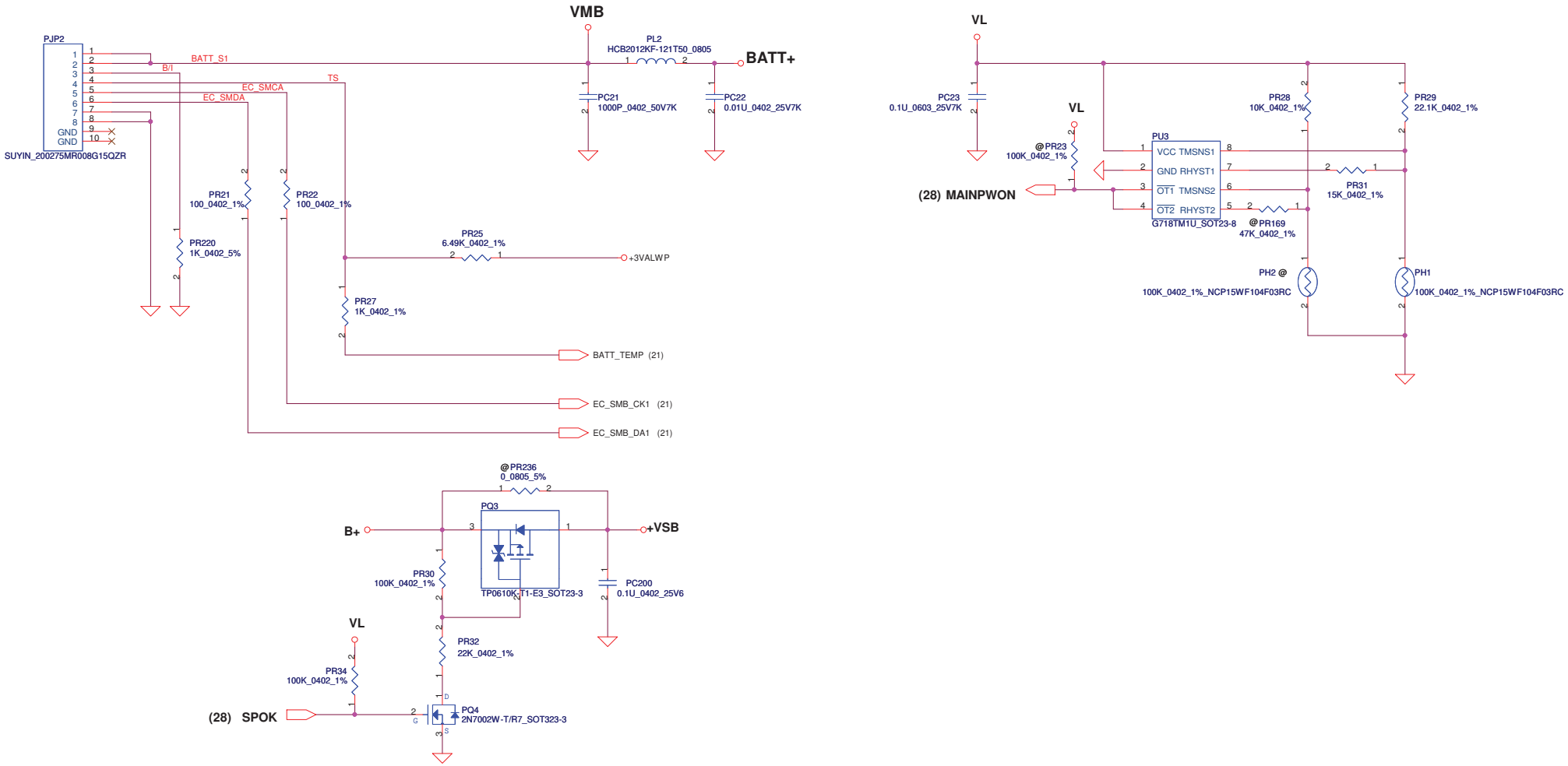

Security Classification	Compal Secret Data		
Issued Date	2007/09/20	Deciphered Date	2008/09/20

THIS SHEET OF ENGINEERING DRAWING IS THE PROPRIETARY PROPERTY OF COMPAL ELECTRONICS, INC. AND CONTAINS CONFIDENTIAL AND TRADE SECRET INFORMATION. THIS SHEET MAY NOT BE TRANSFERED FROM THE CUSTODY OF THE COMPETENT DIVISION OF R&D DEPARTMENT EXCEPT AS AUTHORIZED BY COMPAL ELECTRONICS, INC. NEITHER THIS SHEET NOR THE INFORMATION IT CONTAINS MAY BE USED BY OR DISCLOSED TO ANY THIRD PARTY WITHOUT PRIOR WRITTEN CONSENT OF COMPAL ELECTRONICS, INC.

Compal Electronics, Inc.

Title: BATTERY CONN / OTP

Size: Custom | Document Number: NAV51 LA-6311P | Rev: 0.1

Date: Wednesday, April 14, 2010 | Sheet 26 of 33

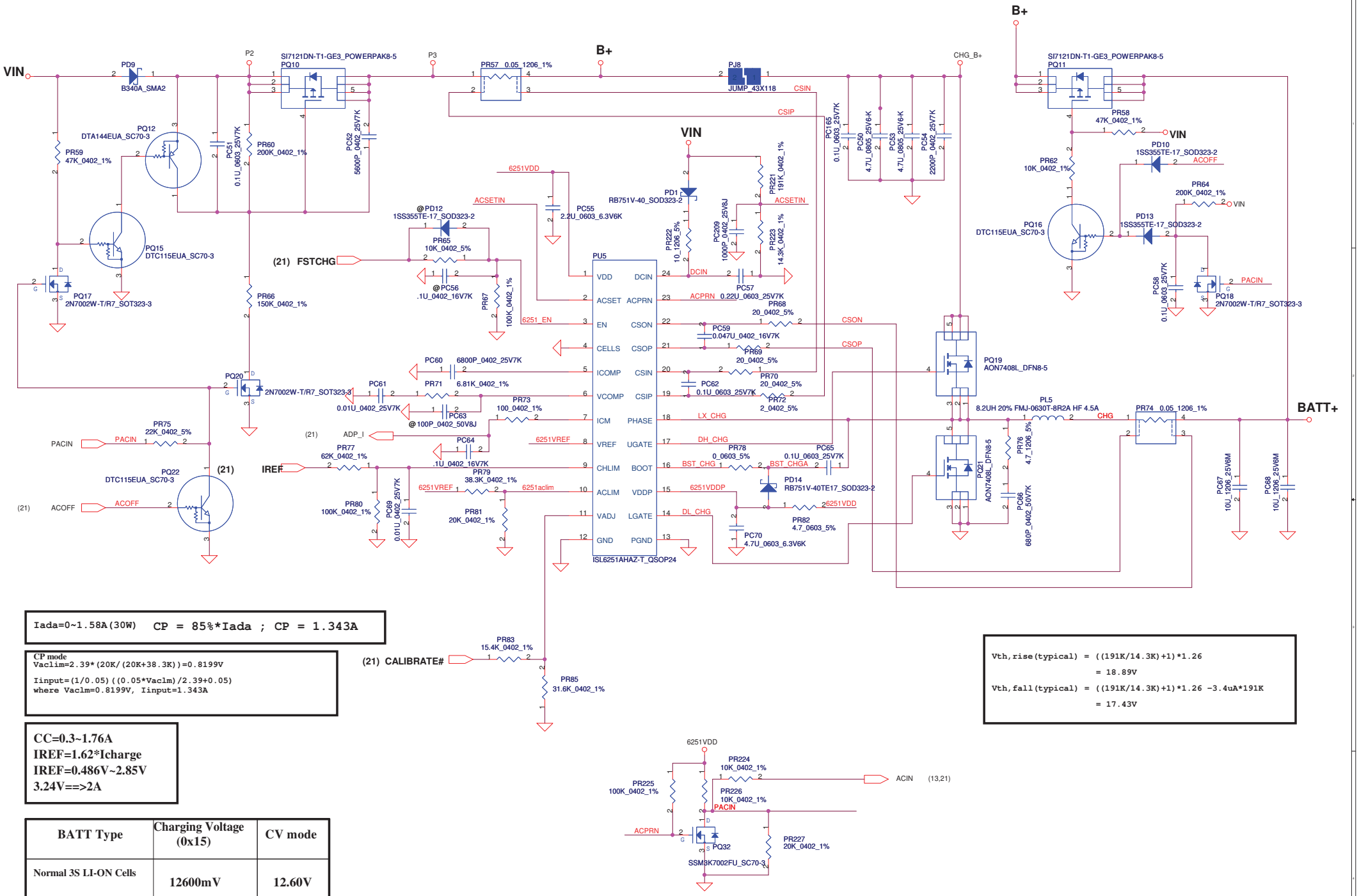


```
Iada=0~1.58A(30W)   CP = 85%*Iada ; CP = 1.343A
```

CP mode

```
Vaclim=2.39*(20K/(20K+38.3K))=0.8199V

Iinput=(1/0.05)((0.05*Vaclm)/2.39+0.05)
where Vaclm=0.8199V, Iinput=1.343A
```

```
Vth,rise(typical) = ((191K/14.3K)+1)*1.26
                  = 18.89V
Vth,fall(typical) = ((191K/14.3K)+1)*1.26 -3.4uA*191K
                  = 17.43V
```

CC=0.3~1.76A
IREF=1.62*Icharge
IREF=0.486V~2.85V
3.24V==>2A

BATT Type	Charging Voltage (0x15)	CV mode
Normal 3S LI-ON Cells	12600mV	12.60V

```
VADJ-->VREF-->4.41V
VADJ--->Ground--->3.99V
Vcell=(0.175*VADJ+3.99)
```

Security Classification	Compal Secret Data		
Issued Date	2007/09/20	Deciphered Date	2008/09/20

THIS SHEET OF ENGINEERING DRAWING IS THE PROPRIETARY PROPERTY OF COMPAL ELECTRONICS, INC. AND CONTAINS CONFIDENTIAL AND TRADE SECRET INFORMATION. THIS SHEET MAY NOT BE TRANSFERED FROM THE CUSTODY OF THE COMPETENT DIVISION OF R&D DEPARTMENT EXCEPT AS AUTHORIZED BY COMPAL ELECTRONICS, INC. NEITHER THIS SHEET NOR THE INFORMATION IT CONTAINS MAY BE USED BY OR DISCLOSED TO ANY THIRD PARTY WITHOUT PRIOR WRITTEN CONSENT OF COMPAL ELECTRONICS, INC.

Compal Electronics, Inc.

Title: CHARGER

Size: Custom | Document Number: NAV51 LA-6311P | Rev: 0.1

Date: Wednesday, April 14, 2010 | Sheet 27 of 33

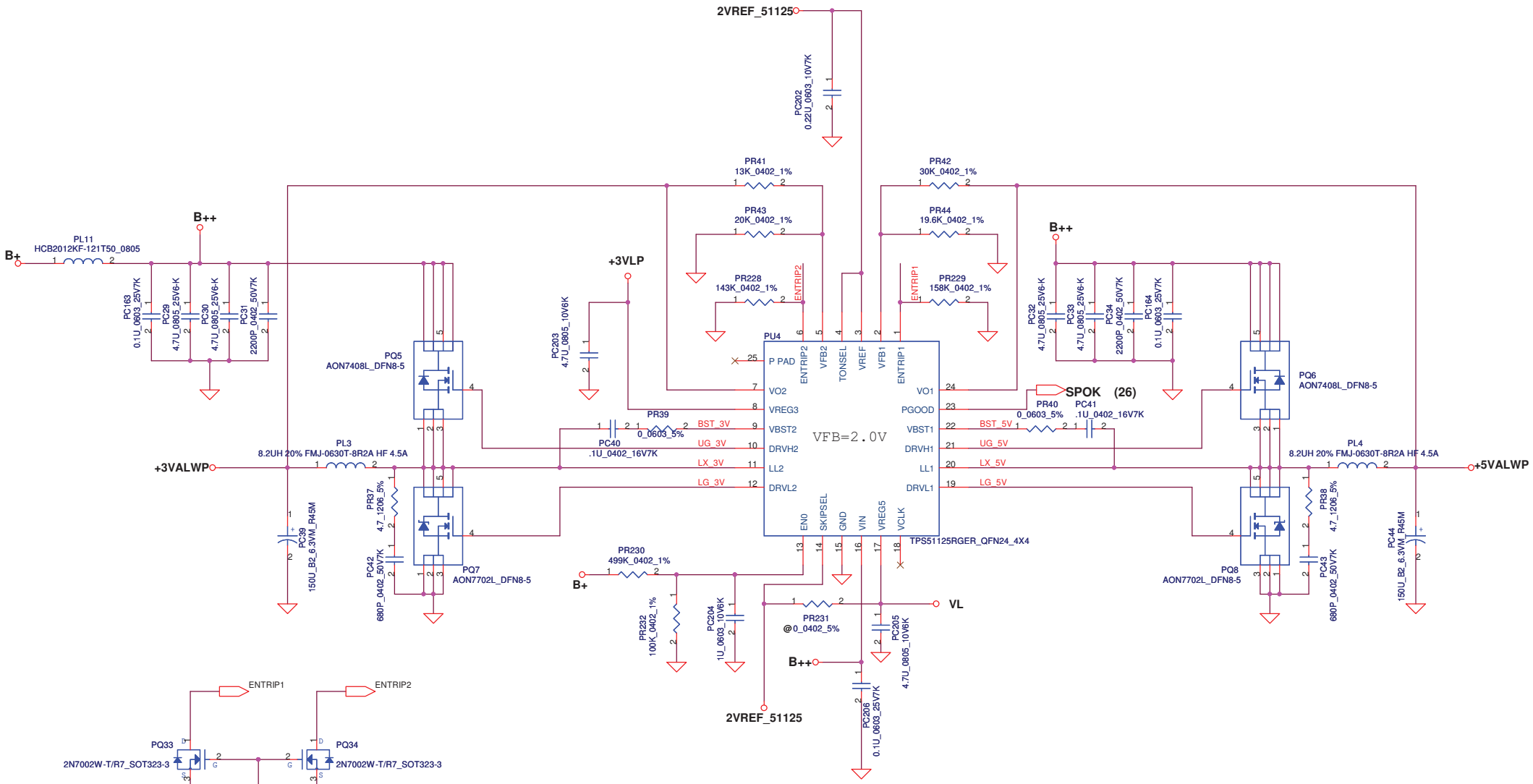


```
+3.3VALWP Ipeak=5.731A  Imax=4.012A
Rds(on)=17.9m ohm(max) ; Rds(on)=14.5m ohm(typical)
Vtrip=(10E-06 * 130K)/9-24mV=134.9mV
Ilimit=134.9mV/17.9m ~134.9mV/14.5m x 1.2
       =7.536A ~ 7.752A
Iocp=Ilimit+Delta I/2
       =8.081A ~ 8.297A
Delta I=1.090A (Freq=305KHz)
```

```
+5VALWP   Ipeak=7.0A  Imax=4.9A
Rds(on)=17.9m ohm(max) ; Rds(on)=14.5m ohm(typical)
Vtrip=(10E-06 * 147K)/9-24mV=151mV
Ilimit=151mV/17.9m ~151mV/14.5m x 1.2
       =8.467A ~ 8.710A
Iocp=Ilimit+Delta I/2
       =9.384A ~ 9.627A
Delta I=1.834A (Freq=245KHz)
```

Security Classification	Compal Secret Data		
Issued Date	2007/11/12	Deciphered Date	2008/11/12

THIS SHEET OF ENGINEERING DRAWING IS THE PROPRIETARY PROPERTY OF COMPAL ELECTRONICS, INC. AND CONTAINS CONFIDENTIAL AND TRADE SECRET INFORMATION. THIS SHEET MAY NOT BE TRANSFERED FROM THE CUSTODY OF THE COMPETENT DIVISION OF R&D DEPARTMENT EXCEPT AS AUTHORIZED BY COMPAL ELECTRONICS, INC. NEITHER THIS SHEET NOR THE INFORMATION IT CONTAINS MAY BE USED BY OR DISCLOSED TO ANY THIRD PARTY WITHOUT PRIOR WRITTEN CONSENT OF COMPAL ELECTRONICS, INC.

Compal Electronics, Inc.

Title: +5V/+3V

Size: Custom | Document Number: NAV50 | Rev: 0.1

Date: Wednesday, April 14, 2010 | Sheet 28 of 33

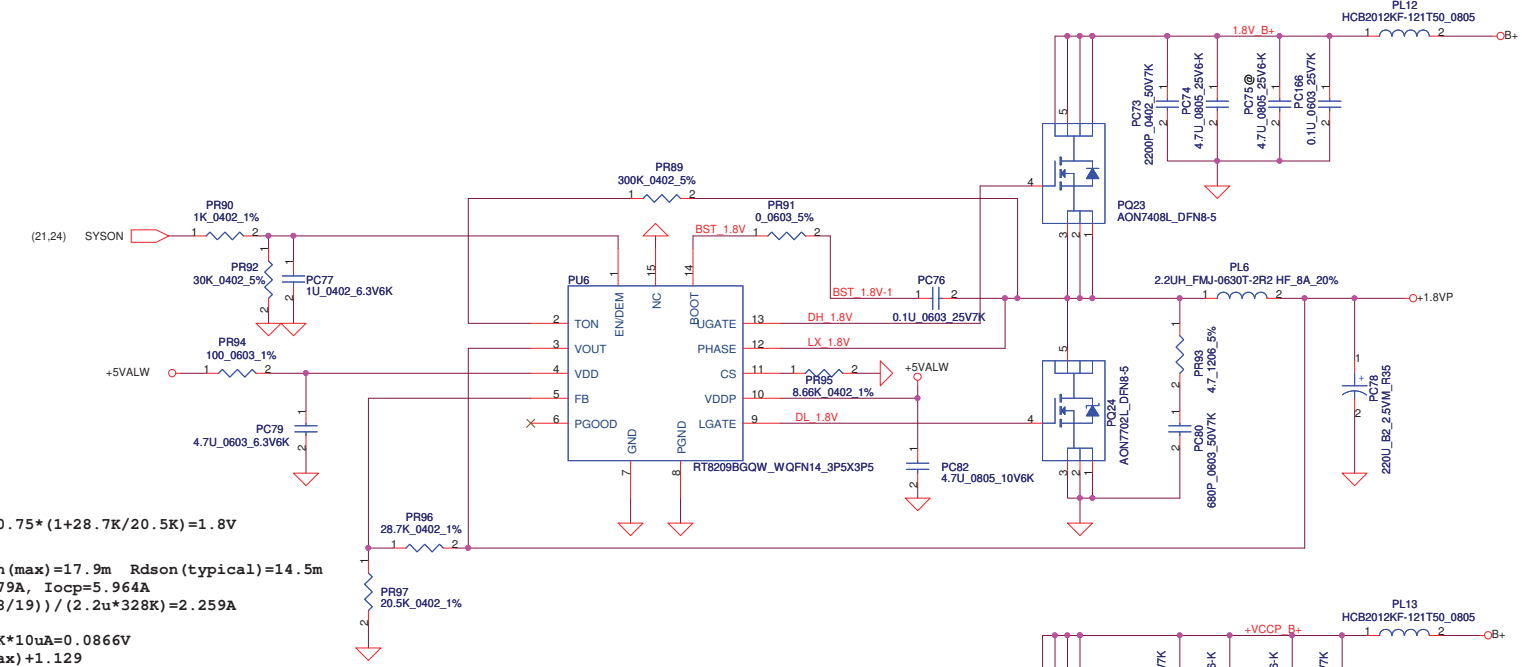

<Vo=1.8V> VFB=0.75V
Vo=VFB*(1+PR96/PR97)=0.75*(1+28.7K/20.5K)=1.8V
Fsw=328KHz

Cout ESR=15m ohm Rdson(max)=17.9m Rdson(typical)=14.5m
Ipeak=4.97A, Imax=3.479A, Iocp=5.964A
Delta I=((19-1.8)*(1.8/19))/(2.2u*328K)=2.259A
=>1/2DeltaI=1.129A
Vtrip=Rtrip*10uA=8.66K*10uA=0.0866V
Iocpmin=Vtrip/(Rdsonmax)+1.129
=0.0866/(0.0179)+1.129=5.967A
Iocpmax=(0.0866/(0.0145*1.2))+1.129A=6.106A
Iocp=5.967A~6.106A

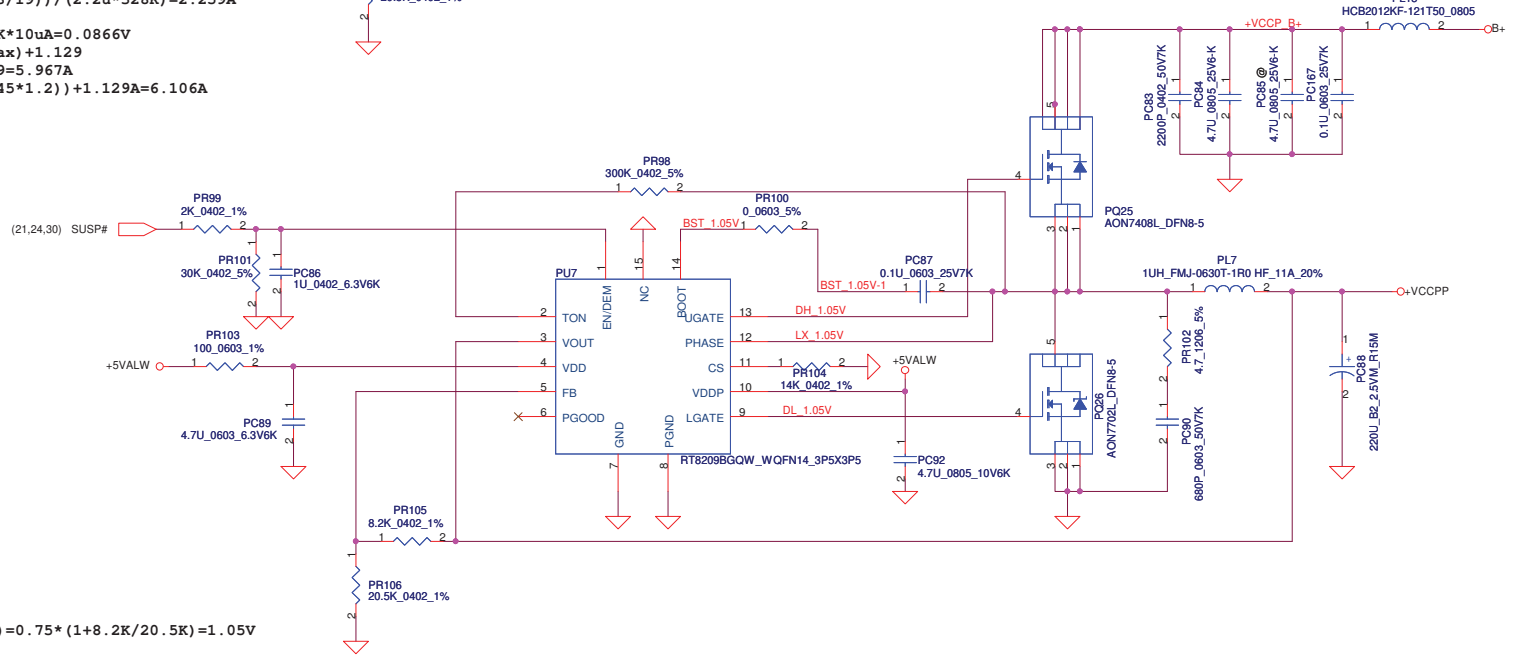

<Vo=1.05V> VFB=0.75V
Vo=VFB*(1+PR105/PR106)=0.75*(1+8.2K/20.5K)=1.05V
Fsw=280KHz

Cout ESR=15m ohm Rdson(max)=17.9m Rdson(typical)=14.5m
Ipeak=3.124A, Imax=2.187A, Iocp=3.749A
Delta I=((19-1.05)*(1.05/19))/(1.5u*280K)=3.549A
=>1/2DeltaI=1.774A
Vtrip=Rtrip*10uA=14K*10uA=0.14V
Iocpmin=Vtrip/(Rdsonmax)+1.774
=0.14/(0.0179)+1.774=9.596A
Iocpmax=(0.14/(0.0145*1.2))+1.774A=9.820A
Iocp=9.596A~9.820A

Security Classification	Compal Secret Data		
Issued Date	2007/09/20	Deciphered Date	2008/09/20

THIS SHEET OF ENGINEERING DRAWING IS THE PROPRIETARY PROPERTY OF COMPAL ELECTRONICS, INC. AND CONTAINS CONFIDENTIAL AND TRADE SECRET INFORMATION. THIS SHEET MAY NOT BE TRANSFERED FROM THE CUSTODY OF THE COMPETENT DIVISION OF R&D DEPARTMENT EXCEPT AS AUTHORIZED BY COMPAL ELECTRONICS, INC. NEITHER THIS SHEET NOR THE INFORMATION IT CONTAINS MAY BE USED BY OR DISCLOSED TO ANY THIRD PARTY WITHOUT PRIOR WRITTEN CONSENT OF COMPAL ELECTRONICS, INC.

Compal Electronics, Inc.

Title: 1.8VP / +VCCPP

Size: Custom | Document Number: NAV51 LA-6311P | Rev: 0.1

Date: Wednesday, April 14, 2010 | Sheet 29 of 33

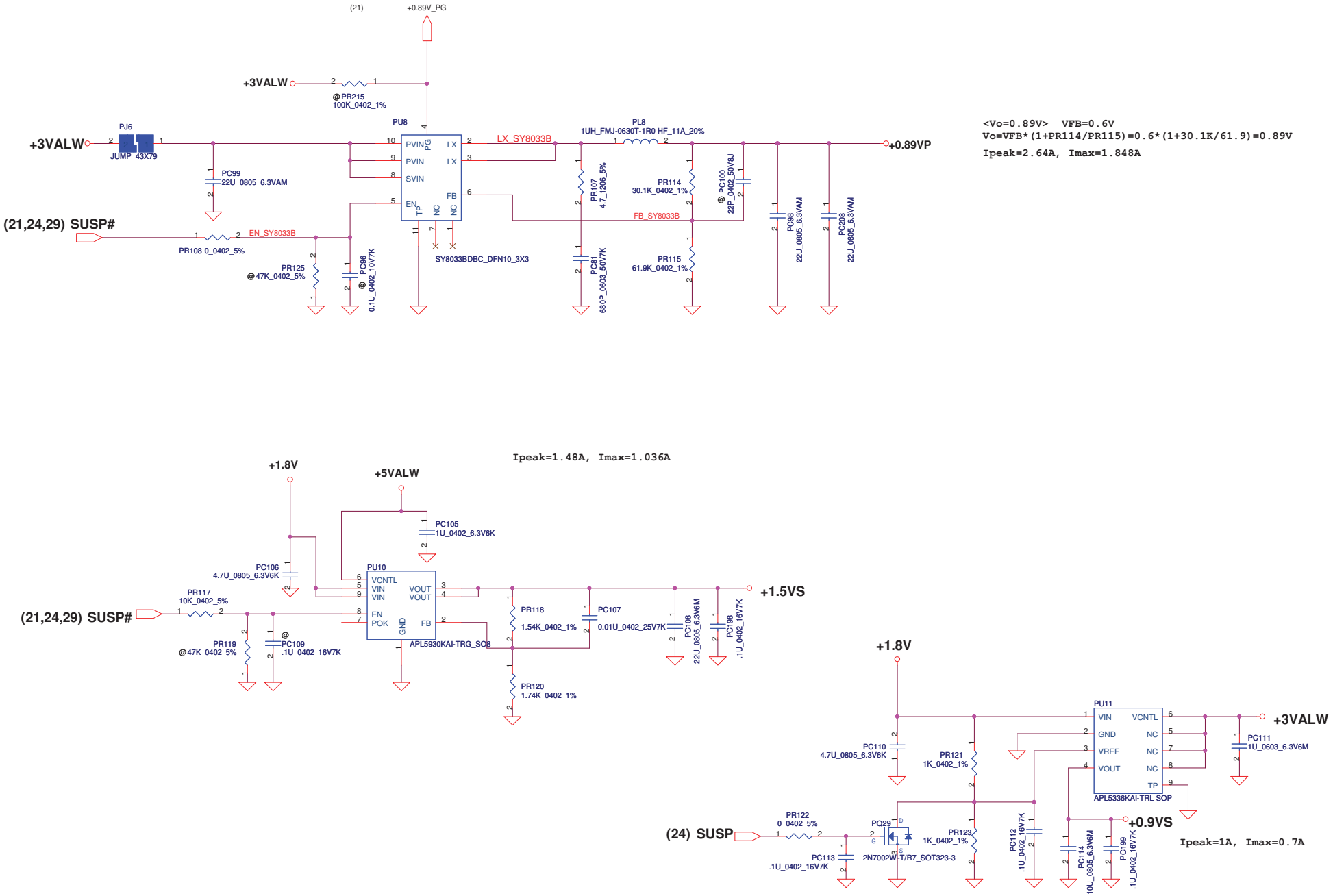

Security Classification	Compal Secret Data		
Issued Date	2007/09/20	Deciphered Date	2008/09/20

THIS SHEET OF ENGINEERING DRAWING IS THE PROPRIETARY PROPERTY OF COMPAL ELECTRONICS, INC. AND CONTAINS CONFIDENTIAL AND TRADE SECRET INFORMATION. THIS SHEET MAY NOT BE TRANSFERED FROM THE CUSTODY OF THE COMPETENT DIVISION OF R&D DEPARTMENT EXCEPT AS AUTHORIZED BY COMPAL ELECTRONICS, INC. NEITHER THIS SHEET NOR THE INFORMATION IT CONTAINS MAY BE USED BY OR DISCLOSED TO ANY THIRD PARTY WITHOUT PRIOR WRITTEN CONSENT OF COMPAL ELECTRONICS, INC.

Compal Electronics, Inc.

Title: +0.89VP/+1.5VS/+0.9VSP

Size: Custom | Document Number: NAV51 LA-6311P | Rev: 0.1

Date: Wednesday, April 14, 2010 | Sheet 30 of 33

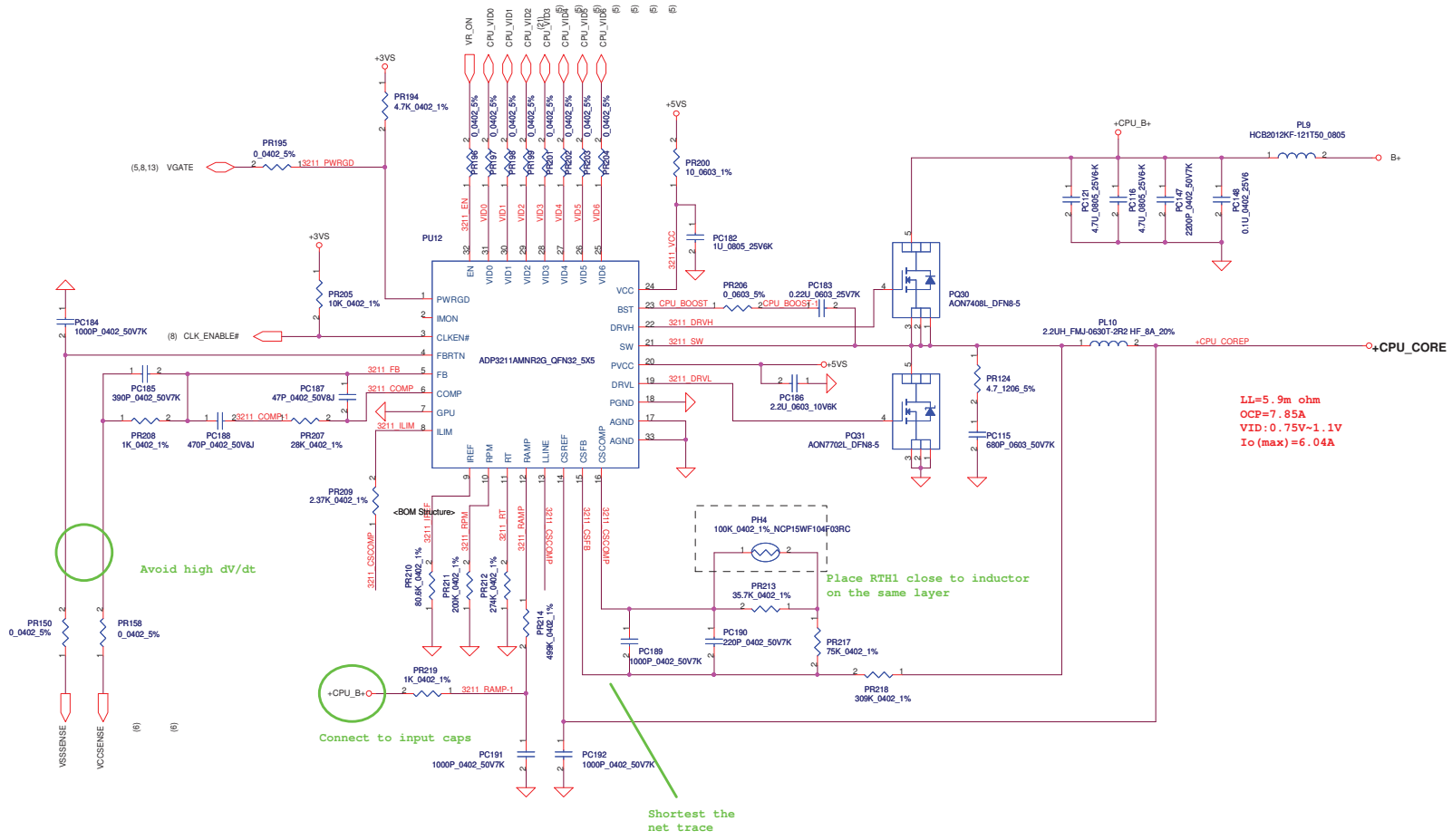

Security Classification	Compal Secret Data			Compal Electronics, Inc.
Issued Date	2007/09/20	Deciphered Date	2008/09/20	Title: +CPU_CORE
				Size: C; Document Number: NAV51 LA-6311P; Rev: 0.1
				Date: Wednesday, April 14, 2010; Sheet 31 of 33

THIS SHEET OF ENGINEERING DRAWING IS THE PROPRIETARY PROPERTY OF COMPAL ELECTRONICS, INC. AND CONTAINS CONFIDENTIAL AND TRADE SECRET INFORMATION. THIS SHEET MAY NOT BE TRANSFERED FROM THE CUSTODY OF THE COMPETENT DIVISION OF R&D DEPARTMENT EXCEPT AS AUTHORIZED BY COMPAL ELECTRONICS, INC. NEITHER THIS SHEET NOR THE INFORMATION IT CONTAINS MAY BE USED BY OR DISCLOSED TO ANY THIRD PARTY WITHOUT PRIOR WRITTEN CONSENT OF COMPAL ELECTRONICS, INC.

Version change list (P.I.R. List)

Item	Fixed Issue	Reason for change	Rev.	PG#	Modify List	Date	Phase
1						2010.1.8	EVT
2						2010.1.11	EVT
3							
4							
5							
6							
7							
8							
9							
10							
11							
12							
13							
14							
15							
16							
17							
18							
19							
20							
21							
22							
23							

Security Classification	Compal Secret Data		
Issued Date	2006/08/04	Deciphered Date	2007/8/18

THIS SHEET OF ENGINEERING DRAWING IS THE PROPRIETARY PROPERTY OF COMPAL ELECTRONICS, INC. AND CONTAINS CONFIDENTIAL AND TRADE SECRET INFORMATION. THIS SHEET MAY NOT BE TRANSFERED FROM THE CUSTODY OF THE COMPETENT DIVISION OF R&D DEPARTMENT EXCEPT AS AUTHORIZED BY COMPAL ELECTRONICS, INC. NEITHER THIS SHEET NOR THE INFORMATION IT CONTAINS MAY BE USED BY OR DISCLOSED TO ANY THIRD PARTY WITHOUT PRIOR WRITTEN CONSENT OF COMPAL ELECTRONICS, INC.

Version change list (P.I.R. List)

Item	Fixed Issue	Reason for change	Rev.	PG#	Modify List	Date	Phase
1	PU8 Vin change to +3VALW	modify for HW layout request	0.1	30		2010.1.8	EVT
2	PU4 Pin25 change to no connect	modify for 3/5V load balance(TI FAE request)	0.1	28		2010.1.11	EVT
3							
4							
5							
6							
7							
8							
9							
10							
11							
12							
13							
14							
15							
16							
17							
18							
19							
20							
21							
22							
23							

Security Classification: Compal Secret Data
Issued Date: 2007/09/20 Deciphered Date: 2008/09/20

THIS SHEET OF ENGINEERING DRAWING IS THE PROPRIETARY PROPERTY OF COMPAL ELECTRONICS, INC. AND CONTAINS CONFIDENTIAL AND TRADE SECRET INFORMATION. THIS SHEET MAY NOT BE TRANSFERED FROM THE CUSTODY OF THE COMPETENT DIVISION OF R&D DEPARTMENT EXCEPT AS AUTHORIZED BY COMPAL ELECTRONICS, INC. NEITHER THIS SHEET NOR THE INFORMATION IT CONTAINS MAY BE USED BY OR DISCLOSED TO ANY THIRD PARTY WITHOUT PRIOR WRITTEN CONSENT OF COMPAL ELECTRONICS, INC.

Compal Electronics, Inc.
Title: PIR (PWR)
Size: Custom | Document Number: NAV51 LA-6311P | Rev: 0.1
Date: Wednesday, April 14, 2010 | Sheet 33 of 33

www.s-manuals.com